नौसेना मुख्यालय
रक्षा मंत्रालय (नौसेना)
पौतशिल्प निदेशालय/
कमरा नंबर ई-308
नौसेना भवन
दिल्ली छावनी ११००१०

Naval Headquarters,
Ministry of Defence (Navy)
Directorate of Naval Architecture
Room No E-308
Nau Sena Bhawan
Delhi Cantt 110010

NOTICE INVITING EXPRESSION OF INTEREST FOR EMPANELMENT OF BOAT BUILDERS

1. **Introduction**. The Directorate of Naval Architecture (DNA), Naval Headquarters, is undertaking an exercise for assessment and empanelment of eligible boat builders for construction and supply of boats to the Indian Navy, with a view to ensure quality, standardisation and timely availability of boats.

2. **Eligibility Criteria**. Any boat builder possessing the requisite infrastructure and technical capability to manufactureboats iaw specifications stipulated in the enclosed Naval Construction Document (NCD) shall be considered for assessment towards empanelment, subject to fulfilment of the following criteria: -

2.1 Should possess an own boatyard with manufacturing facility for GRP boats.

2.2 Boatyard should be approved by a Classification Society, with valid Works Approval.

2.3 Proven experience in construction and supply of GRP boats to any agency.

2.4 Capability and willingness to manufacture boats in full compliance with the technical specifications and requirements stipulated in the enclosed NCD.

3. **Invitation to Boat Builders**. Interested boat builders possessing requisite infrastructure, technical expertise, financial capability and meeting the above eligibility criteria are invited to express their willingness to participate in the assessment process towards vendor empanelment.

4. **Assessment Process**. Firms expressing interest and meeting the eligibility criteria will be considered for assessment by a Board of Officers constituted by Naval Headquarters. The assessment would include verification of technical capability, financial credentials, infrastructure and manufacturing facilities. Empanelment shall be subject to satisfactory assessment and approval by the Competent Authority.

5. **Submission of Expression of Interest**. Interested firms are requested to forward their Expression of Interest (EOI) to the Directorate of Naval Architecture Naval Headquarters, latest by **13 Nov 26**, along with name, registered address and contact details.

6. **General Conditions**. Submission of an EOI or fulfilment of the prescribed eligibility criteria shall not automatically confer any right to empanelment or award of contract. The Indian Navy reserves the right to assess the suitability of applicant firms and take final decision regarding empanelment iaw applicable procedures.

7. **Contact Details**.

Directorate of Naval Architecture
E308, Nausena Bhawan
Naval Headuqrters
Delhi Cantt
New Delhi 110010

Mob: 011 28702454
Email: dna.ihqmod@navy.gov.in

8. **Last Date for Submission of EOI**. 13 Nov 26

NCD SPECIFICATION

NCD 4026, ISSUE-1, NOV 2026

SPECIFICATION FOR RHBs

4.7 M RIGID HULL BOAT (Pattern Number: N4220-P062121)
6.5 M RIGID HULL BOAT (Pattern Number: N1940-P063081)
7.0 M RIGID HULL BOAT (Pattern Number: N1940-000328)
10 M RIGID HULL BOAT (Pattern Number: NSN 1940-720594657)

Issuing Authority

Naval Headquarters
Directorate of Naval Architecture
E-308, Nausena Bhawan
New Delhi 110010

RECORD OF AMENDMENTS

SER	AMENDMENTS	AUTHORITY	DATE	SIGNATURE

NCD SPECIFICATIONS

NCD 4026	ISSUE – 1	NOV 2026

Specifications for 4.7 m, 6.5 m, 7.0 m and 10m RHB

The issue and use of this specification is authorised on behalf of the Indian Navy by

(Nitin Saxena)
Commodore
Commodore (Naval Architecture)

Promulgated by

Directorate of Naval Architecture
Naval Headquarters
E308, Nausena Bhawan
New Delhi -110010
Tele & Fax: 011- 28702454

CONDITIONS OF RELEASE

1. This NCD Specification has been prepared for the use of the Indian Navy and of its contractors in the execution of contracts for 4.7m, 6.5m, 7.0m and 10m RHB for the Indian Navy.

2. This document is Indian Navy Copyright and the information therein may be subjected to Indian Navy or third party rights. It is not to be released, reproduced or published without written permission of the Naval Headquarters, Ministry of Defence.

3. Indian Navy reserves the right to amend or modify the contents of this specification without consulting or informing any holder.

4. This specification may call for the use of processes, substances and procedures that may be injurious to health if adequate precautions are not taken. It refers only to technical suitability and in no way absolves either the supplier or the user from statutory obligations relating to health and safety at any stage of manufacture or use.

5. Where attention is drawn to hazards, those quoted may not necessarily be exhaustive.

6. This specification is the property of the Indian Navy and unless otherwise authorised in writing by the Naval Headquarters, must be returned on completion of the contract or submission of the tender, in connection with which it is issued.

7. When the specification is issued in connection with a tender or contract, the user should ensure that he is in possession of the correct version of each document relevant to each particular tender or contract. Enquiries in this connection may be made from Directorate of Naval Architecture, E308, Nausena Bhawan, New Delhi, Tele: 011-28702454.

8. Unless otherwise specified, reference in this specification to any document means the issue and all amendments to the document current at the date of issue or subsequent amendments to this specification.

INTRODUCTION

1. This NCD Specification is sponsored for the Indian Navy, by the Commodore (Naval Architecture), Naval Headquarters, Ministry of Defence New Delhi 110001

2. It is to be applied as required for contracts concerning design and construction of 4.7 m, 6.5 m 7.0 m and 10 m RHB.

3. If it is found to be technically unsuitable for any particular requirement the Sponsor is to be informed in writing of the circumstances with a copy to the Commodore (Naval Architecture), Directorate of Naval Architecture, E308, Nausena Bhawan, New Delhi, Tele: 011-28702454.

4. Any user of this Specification may propose an amendment to it. Proposals for amendments which are:-

4.1. Not directly applicable to a particular contract are to be made to the Sponsor of the NCD.

4.2. Directly applicable to a particular contract are to be dealt with using existing procedures or as specified in the contract.

5. No alteration is to be made to this NCD specification except by the issue of a formal amendment by Directorate of Naval Architecture, Naval Headquarters, Ministry of Defence.

6. Unless otherwise stated, reference in this NCD specification to approval, approved, authorised or similar terms means “by the Naval Headquarters, Ministry of Defence (Navy)”.

CONTENTS

Ser No	Content
PART I	
SECTION	**SUBJECT**
1	Scope
2	Function
3	General Description
4	Design
5	Hull Construction Material
6	Equipment & Fittings
7	Electrical Requirements
8	Drawing and Documents
9	Progress Monitoring
10	List of fittings, Accessories, OBS and B&D Spares
11	Inspections, Tests & Trials
12	Despatch/ Receipt of Boat
13	Training
PART II	
APPENDIX	**SUBJECT**
A	Guideline QAP
B	Standard Equipment and Fittings
C	Rescue Cradle (Jason's Cradle)
D	Standard list of Sea going Accessories
E	ILMS Format for OBS and B&D Spares
F	List of OBS and B&D Spares
G	Inspections, Tests and Trials
PART III	
ENCLOSURE	**SUBJECT**
1	Specifications of 4.7 m RHB
2	Specifications of 6.5 m RHB
3	Specifications of 7 m RHB
4	Specifications of 10 m RHB

SPECIFICATIONS FOR CONSTRUCTION OF 4.7 M, 6.5 M, 7.0 M AND 10 M RHBs

SCOPE

1. This specification relates to detailed requirements for the design, construction, equipment and its installation, systems, tests, trials and documentation for 4.7m, 6.5m, 7.0m and 10m RHB of GRP. All common aspects pertaining to these boats are indicated in the master document and boat-specific aspects are brought out in Enclosures 1 to 4 respectively.

2. If during construction it appears that:-

2.1. A deviation from the specification or drawing appears desirable,

or

2.2. A characteristic has been omitted or is not sufficiently specified,

or

2.3. A specified characteristic cannot be attained or can be attained with penalties in other directions, then the builder is to inform NHQ immediately of the circumstances together with the proposed alternatives and proceed with the construction only after he is satisfied that the constructed boat would meet all performance requirements.

FUNCTIONS

3. The boat shall perform the following tasks at sea and in harbour:-

3.1. Life Boat

3.2. Search and Rescue Boat

3.3. Transport boarding and landing party on to own, neutral or adversary ships and shore.

3.4. For carrying of working parties/passengers.

3.5. CASEVAC

3.6. Undertake stores transfer

3.7. Patrol

3.8. Provision for Special Operations by suitably changing configuration and carrying additional fuel tank (for 10m RHB only)

4. The boat shall be designed to be operational and maneuverable safely in stipulated sea conditions at specified speeds and in all loading conditions. **The**

boat shall be stable in accordance with IMO regulation for lifeboats. The chines shall be particularly stiffened to ensure that impacts at the waterline do not compromise the integrity of the hull.

5. The boats shall be configurable for launching and recovery whilst underway in accordance with BR 67/2009 (Admiralty Manual of Seamanship). The boat shall offer good maneuverability and throttle response throughout its speed range and particularly when coming alongside or breaking away from an underway vessel at its full load and complement.

GENERAL DESCRIPTION

6. The boat shall be built as per proven hull form which can achieve the desired parameters with similar hull dimensions. Details of such proposal and authenticity of the design shall be provided along with the technical bid. Acceptance of such proposal is completely up to the discretion of Indian Navy.

7. The construction of the boat is to be robust enough to ensure a service life of at least **12 -15 years.**

8. All equipment, fittings etc. (where not specified) shall be brand new, approved by class and their installation work shall be in accordance with the Class requirements/ standard marine practices and shall satisfy Indian Navy/ Inspecting Agency. All parts, sub-assemblies and components shall comply with the requirement of drawings and specifications to the satisfaction of the Indian Navy/ Inspecting Agency.

9. No materials, parts, components or complete units which have been rejected shall be retreated or adjusted without the approval of the Indian Navy / Inspecting Agency.

10. **Environmental Conditions for Equipment & Machinery**. All equipment & Machinery should be suitable for continuous operation in ambient temperature up to 50^0C, water temperature from 04 to 38^0C, relative humidity of 95% at 35^0C and roll of 25^0 and pitch of 8^0.

DESIGN

11. **Design.** The complete boat should be designed and built under the approval of one of the following Classification Societies - IRS/ ABS/ LR/ BV/ NKK/ DNV-GL/RINA. The design of the boat should be approved by the Classification Society for following, for which the boat builder is to carryout in-house detailed calculations and drawing work and submit the same for approval of Indian Navy within two months of receipt of purchase order:-

11.1. HSC Code/ SOLAS/ FTP Code/ AFS Convention as applicable.

11.2. Structural strength as per Class rules to meet the functional requirement.

11.3. Material requirements as per Class rules.

11.4. Stability and subdivision as per IMO regulations.

11.5. Fire fighting as per class requirement.

11.6. Anchoring, mooring, towing, fendering and lifting arrangements as per Class rules.

11.7. Navigation, Anchoring and Mooring requirements as per COLREGS and Class.

11.8. Electrical Installation as per Class.

11.9. Engineering machinery, propulsion, shafting and piping systems as per Class.

11.10. Type Approved engine.

12. The boat shall be constructed as per a proven hull design and in accordance with Classification Society **(IRS/ ABS/ LR/ BV/ NKK/ DNV-GL/ RINA)** rules and norms.

13. The boat shall be built in a facility approved by Classification Society for construction of powered FRP boats. Upon successful completion of construction, inspection, tests and trials *iaw* Classification Society requirements, a Class Compliance Certificate/ Statement of Fact shall be issued by the Classification Society confirming satisfactory compliance with the approved rules/ specifications of this NCD.

14. The builder is to keep in mind continuously the fact that, economy of weight and space is of utmost importance. Accordingly, equipment and fittings of minimum dimensions and weight subject to given or approved dimensions commensurate with satisfying operation shall be supplied. An actual and accurate weight record of hull structure, fittings, equipment, accessories etc shall be forwarded to Indian Navy through Inspecting agency after verification.

15. Boat design offered is required to be a proven one (*boats as per the offered design have been built and supplied in the past for the specified function*) and conforming to this specification. The conformity of the design to the requirements

of this specification should be submitted along with technical bids as a Para wise compliance matrix supported by complete design documentation.

16. In case the offered design is a new one (not built and supplied in the past for the same function), on placement of order, the builder is to carry out detailed design calculations and **Model testing (IIT or NSTL)/ CFD Analysis (Approved by IACS member Class)** of the hull form offered in accordance with Class rules. The model testing/ CFD Analysis should cover resistance, propulsion, powering and seakeeping parameters of the boat. The design calculations and the model test reports are to be vetted by the Classification Society in accordance with Class rules and submitted to Indian Navy for approval. Model testing may be witnessed by Indian Navy rep.

17. The builder shall ensure that the offered boat meets the specified speed, endurance, carrying capacity and all other functional requirements.

18. In case there is a conflict between the requirements of Class and the requirements laid down in this specification, the requirements stipulated in this specification/ *IN's* decision shall take precedence.

19. The construction of the boat is to commence only after the class approved design calculations and drawings are vetted by Indian Navy.

20. All drawing will be approved by Classification Society and all inspection will be undertaken by Classification Society as per QAP at **Appendix 'A'**.

HULL CONSTRUCTION MATERIAL

21. Boat hull is to be constructed using Class approved Multiaxial/Non-Crimp Fabric/ Carbon fibre with Isophthalic/ Vinyl Ester/Epoxy resin meeting fire standards of Class. Mandatory Vacuum-infusion method shall be adopted for hull construction. Usage of plywood is prohibited.

22. **Boat Hull**. The hull of the boat should be monohull single skin and sandwich construction as per Class approved drawings. The hull shall be constructed in accordance with Classification Society rules and regulations. The construction of hull should be as per structural drawings and lay-up scheme approved by Classification Society. Plug, Mould, lay-up procedure and material for hull construction shall be in accordance with Class requirements as mentioned in the QAP. On completion of construction and satisfactory trials, the builder shall submit necessary Class certificate to Indian Navy. The hull structural drawing approval by Class should cover the design of lifting points and other load bearing points such as bollards, fairleads, cleats and towing hooks.

22.1. The hull shall be of one piece. GRP moulding with integral bulkheads, GRP frames, longitudinal, stringers and engine bed.

22.2. Additional reinforcements shall be provided in way of transom corners, keel and deck connections to the hull.

22.3. 10m RHBs shall be self-righting type with a deep 'V' shape planing hull.

23. **Bulkheads**. The bulkheads construction shall be as per Classification society norms.

24. **Deck**. Deck shall be constructed with GRP laminates as per Classification Society Rules. All the exposed surfaces of the main deck shall be given anti-skid finish. Additional chaffing laminate shall be provided in way of anchor arrangements.

25. **Transom**. The transom shall be adequately stiffened for taking the necessary engine/ OBM drive load and fitment of bollards and fairleads. The top shall be fitted with SS channel for protection. Height of the transom shall be such that there shall not be any water ingress through transom during astern movement, manoeuvring and crash stopping.

26. **Buoyancy**. The boats shall be provided with sufficient buoyancy so that the boat does not sink and satisfactorily clears swamp test. The quantity and arrangement of buoyancy proposed shall be as per Classification Society rules. Buoyancy material should be Class approved (closed cell polyurethane foam).

27. **Deck Fittings**. All steel deck fittings shall be of Stainless Steel grade AISI 316L. All these fittings shall be fastened through FRP on to a SS backing plate with SS fasteners. The backing plate shall be laid up and covered up with adequate number of FRP layers to ensure strength and water tightness. All the deck fittings need to be as per IS/ International standards and to be certified by Class. The deck should not be pierced/ drilled for fitment of any appendages like foot straps etc.

27.1. Necessary test reports & specifications of the raw materials/fittings etc used in the construction of the boat shall be produced by the builder, as required by Classification Society (IRS/ ABS/ LR/ BV/ NKK/ DNV-GL/ RINA) and reviewed by Indian Navy/Inspecting agency during inspection.

27.2. The names and addresses of the firms from whom it is ordered/ subcontracted for various material/fittings are to be made available to the Inspecting Authority/ Indian Navy and Inspecting Agency, during inspection. Complete details of the source of each fitting including contact details shall be indicated in D-787 and Boat Manual.

28. **Foam Filled Collar**. Foam filled collar fabric and foam should be *iaw* NCD 4008, Issue-1. End cones are to be suitably stiffened to take impact during astern motion. The tube shall be fitted with heavy-duty abrasion cladding (8"

wide) on the outboard side all around the collar. The Collar should have an additional fendering layer at locations likely to encounter repeated bashing/rubbing and stepping by personnel and crew.

28.1. Securing arrangement of the collar with hull shall be approved by class and will be by means of two arrangements, viz. Primary and secondary securing arrangements as follows:-

28.1.1. The Primary arrangements should ensure rigid connection of the collar to the hull and water tightness between the collar and the hull. The arrangement should be such that the collar can be disconnected when required for necessary repairs.

28.1.2. Secondary arrangement for securing collar to the boat should using suitable number of polyester webbing reinforced straps fixed to the hull.

28.1.3. The watertight integrity of the hull should be maintained post fitment of collar.

28.2. **Retro-Reflecting Tapes**. White retro reflecting tapes of 100 x 40 mm size shall be pasted on top of collar at bow area, mid-section and aft section on both Port & Stbd side.

28.3. **Mandatory Fitment on the Collar**. The collar should be suitably fitted out to withstand the wear and tear due to usage. Towards this, the collar shall be provided with rubbing strake (rub strip/wear strip) of vinyl/urethane/EPDM/Neoprene 8”/ 10” wide with raised ribs of colours black or grey. These moulded rubbing strips (250mm) should be doubled, tripled, quadrupled, etc. to fully protect outside surface of collar in critical wear areas. Life lines should be attached to the collar D-rings, grommet strips, or fabric loops. Anti-skid coating of black urethane with anti-slip features should be provided at essential areas.

28.4. **Bow fender**. A fixed bow rubber fender shall be provided in addition to all round heavy duty cladding, only for 10m RHBs.

28.5. **Additional Fittings on Collar**. A removable 12 mm braided black polypropylene rope covering shall be provided all around the collar as standard fitment additional to life lines. Twelve moulded grab rope attachments shall be bonded to the outboard faces of the Collar, six at each side. Ten longitudinal terylene rope grab handles shall be fitted to these attachments, five to each side, these in turn being covered by loose fitting rubber tubes. Eight moulded handholds (for 4.7m RHB)/ Twelve moulded handholds (all others) shall be bonded to the upper surfaces of the collar. The following are also to be fitted: -

28.5.1. Two Paddle blade pockets

28.5.2. Two boat hook pockets

28.5.3. Two Rope stowage pockets

28.5.4. One Anchor bucket

28.5.5. One Drogue type fair lead

28.5.6. Two Fairleads near transom (stbd & port)

28.5.7. D-ring patch assembly for Jason Cradle (both side)

28.5.8. Anti-skid patches at various places

28.5.9. Additional collar cover for bow area secured with rope lashing.

29. **Painting**.

29.1. External surfaces of the boat shall not be painted but the gel coat shall be pigmented with light grey shade to RAL 7040.

29.2. All GRP surfaces inside the hull shall be coated with a layer of tissue mat and coated with gel coat pigmented to light grey (RAL 7040).

29.3. Coating plan shall be approved by Class.

30. **Command Console**. Watertight control console for the operation of coxswain shall be mounted on the centre line. All engine controls, navigation and common instruments shall be mounted on the console. A wind deflector made of 10 mm acrylic sheet shall be fitted on the forward sides of the console to protect the coxswain from wind and spray. The wind deflector shall be so fitted as to allow vision over it in all directions. Battery stowage and electrical distribution panels shall be housed under the console, access being by a WT hatch. These specifications are applicable for 4.7m, 6.5m and 7m RHB. For 10m RHB, refer **Encl 4**.

30.1. The construction and fitment of console should comply with **IP 56** or above. All electrical installations, instrumentations and batteries shall be housed inside the console as per marine standards. The coxswain shall operate the boat from a seated position. The field of vision from the main helm position shall conform to the requirements of **ISO 11591**.

30.2. The instrument and compass should be provided with illumination, controlled by a toggle switch on instrument Panel.

30.3. A navigational compass of reputed make shall be fitted on top of the console in a suitable position (with guard) for the coxswain use.

30.4. The instrument panel should be protected with moulded acrylic (waterproof) cover.

30.5. All electrical fittings shall be fully marinised and water tight including Navigation equipment.

31. **Seating Arrangement**. Seating arrangement shall be provided as follows:-

31.1. Shock mitigating, straddle type seats with backrest for coxswain and/ or Navigator.

31.2. Suitable stowage space and securing for one stretcher bound patients in fore and aft direction (for 6.5m and 7m RHB) and two stretcher bound patients in fore and aft direction for 10m RHB. (Not applicable to 4.7m RHB)

31.3. Front facing, shock mitigating, jockey type seats for passengers.

31.4. Additional Requirements for 10m RHB. Removable and configurable seating arrangement:-

31.4.1 To maximise equipment/ stores carrying capacity.

31.4.2 To configure RHB for embarkation of Flag/ Senior Officers.

EQUIPMENT & FITTINGS

32. The boat shall be supplied with Standard Equipment and Fittings as per list placed at **Appendix 'B'** and other additional equipment/fittings mentioned in this specification. All equipment/fittings shall be of reputed make/ designed for marine use.

33. **LMG/MMG Pedestal Stand**.

33.1. **For 4.7m RHB.** One portable, telescopic gun mount stand at the bow for LMG/MMG shall be provided as per ***IN*** Specifications (Mat SS 316L). Foot stirrups on deck and anchoring arrangements for body harness on gun mount stand to support gunman to be provided.

33.2. **For 6.5m, 7m RHB.** MMG Telescopic stand with detachable arrangement as per ***IN*** specifications (Mat SS 316L) shall be provided at

bow area, well clear of snub of the collar. Stowage space shall be provided for 40Kg of ammunition in 04 boxes of size approx 490 x 350 x 250 mm each. Foot stirrups on deck and anchoring arrangements for body harness on gun mount stand to support Gunman to be provided.

33.3. **For 10m RHB.** One fixed gun mount stand (MOLSAP type) at the bow for LMG/MMG shall be provided as per ***IN*** Specifications (specs shall be shared with bidders). Additionally, Portable/ retractable gun mount stands on either side at stern for LMG/ INSAS to be provided. The reinforced base for the stands shall be adequately strengthened to take requisite loads and should be watertight. Boat builder should cater for stability during simultaneous operation of all three gun mounts (even during high speed manoeuvring). Foot stirrups on deck and anchoring arrangements for body harness on gun mount stand to support Gunman to be provided. Stowage space shall be provided for 21 kg of ammunition.

34. **Bollards and Fairleads**. Appropriate sized head bollards made of Stainless Steel AISI 316L shall be fitted to the centre of the forward deck (one no.). One pair of appropriately sized cleats and one pair of appropriate sized fairleads made of Stainless Steel AISI 316L shall be fitted in the transom area (Port & Stbd). One drogue type fairlead to be fitted at bow.

35. **Collapsible Canopy (for 6.5m and 7m RHBs)**. A canopy made of 100% polyester canvas light grey supported on collapsible aluminium truss-work sufficient to provide weather protection to the coxswain and co-passenger is to be made available. Necessary arrangements for securing the canopy-umbrella are to be incorporated.

36. **Lifting Arrangement (For 4.7/ 6.5/ 7m RHB)**. The boat shall be fitted with suitable three/ four point lifting using a deck-crane or a single arm radial davit. **The design of the Lifting arrangement shall be such that it lasts for the entire service life of the boat**. The builder shall demonstrate hoisting/ lowering and stowage of the boat on single arm/ single point lifting arrangement on board designated Indian Naval Ship. A lifting sling meeting the *IN* specifications/ as per extant *IN* policy is to be supplied along with the boat. The sling is to be shackled to these slinging points by bow screw shackles. The bolts of these shackles shall be moused to prevent them working loose. The sling shall have a Safe Working Load of 1.5 tonnes/ 3 tonnes/ 4.5 tonnes for 4.7m/ 6.5m/ 7m RHB respectively. The sling is designed to place the RHB horizontally in the water. The builder should provide load test certificate for the sling set to twice the Safe Working Load. The entire arrangement shall be approved by Class. Further, the boat builder shall clearly indicate recommended periodic maintenance routines for the lifting arrangement. Various types of lifting arrangements that can be used are as follows: -

36.1. **Type 1.** This type constitutes two SS bolts, passing through an SS strip fitted with deck ring, embedded/ laminated to the frames/ bulkhead

with support from a backing plate **outside of the hull**. In some cases, rear lifting assemblies are fitted at transom.

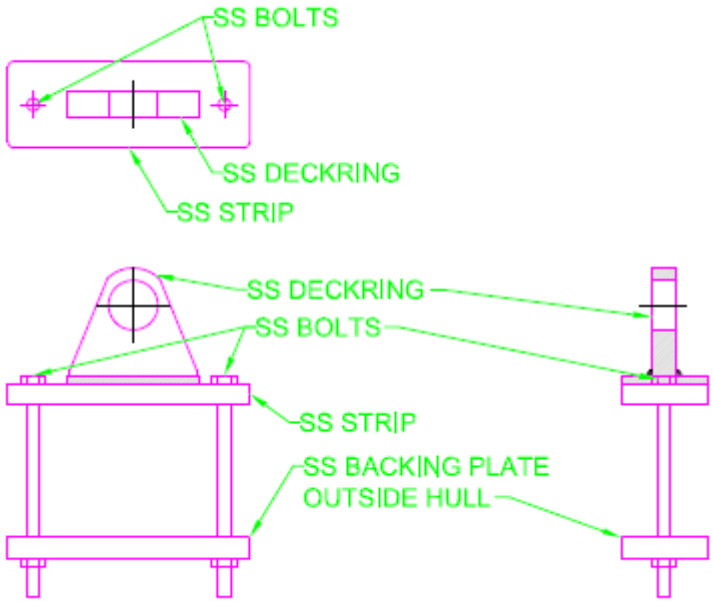

36.2. **Type 2.** This type constitutes two SS bolt lifting arrangement embedded/ laminated to the frames/ bulkhead with support from a backing plate **inside of the hull**.

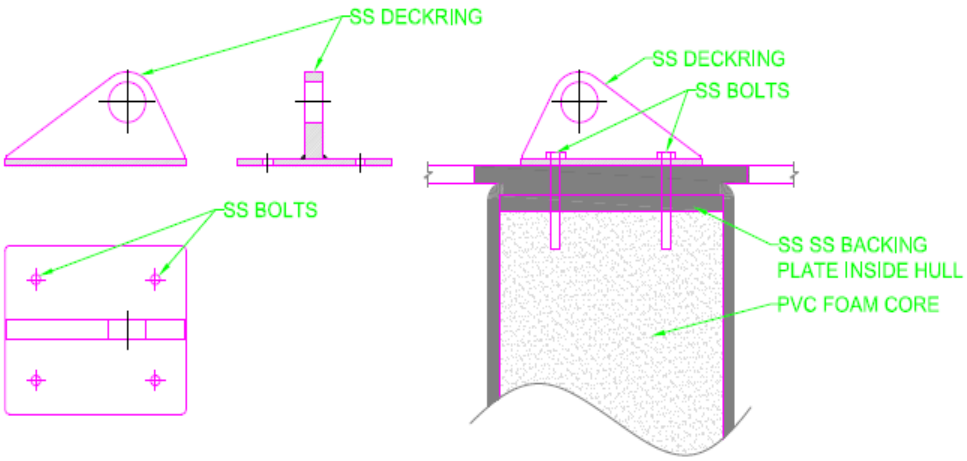

36.3. **Type 3.** Type 3 lifting arrangement consist of top and bottom plates welded to an intermediate structure which is in the form of an I-beam. These top and bottom plates are fastened to deck and outer hull with nuts/ bolts. The intermediate structure has a centre-pipe flanked by plates on two sides. The intermediate structure is enclosed inside the void space/ buoyancy chamber of the boat. In this arrangement, the centre-pipe is to be enclosed within a compact brick filled with hydrophobic foam and not to be left hollow.

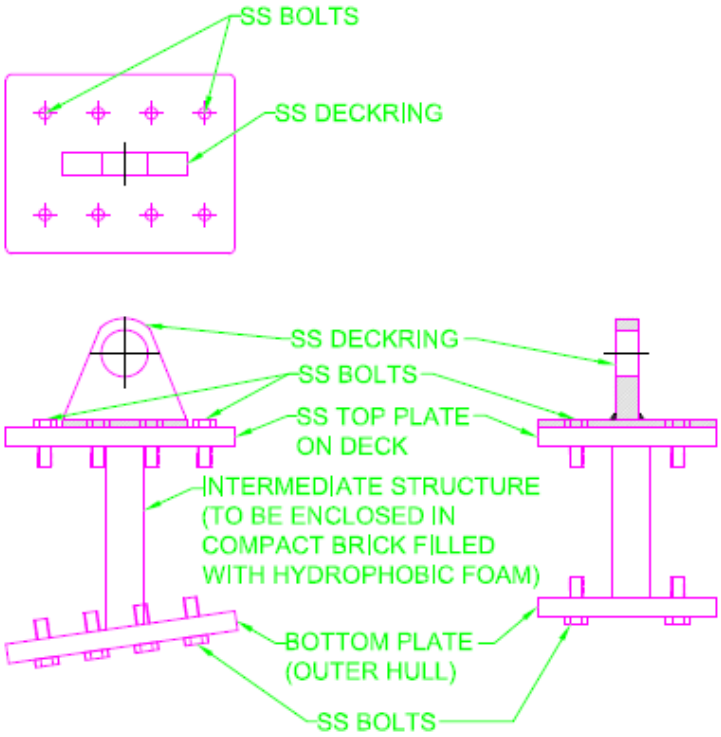

37. **Lifting Arrangement (for 10m RHB)**. The boat shall be fitted with a single point lifting arrangement for ship borne operations in accordance with Article 05099 of BR 67/2009. The lifting frame shall be positioned and designed so that the RHB will adopt an even trim when lifted. The hook shall be of Henriksen make or equivalent having authorized sales & service rep in India. Boat builder shall supply the boat hook OEM recommended associated items like lifting ring, adaptor plate, nuts & bolts etc. from the same OEM. The arrangement shall be approved by Class. Load test certificate shall be provided for the lifting arrangement. The boat builder may visit the designated ship prior finalizing the arrangement to ensure safe and correct lowering/ hoisting/ stowing operations. The builder shall be responsible for proving and demonstrating hoisting/ lowering and stowage of the boat on single arm/ single point lifting arrangement onboard designated Indian Naval Ship. Additionally, one lifting ring (Make: Henriksen/ Equivalent) of suitable capacity shall be supplied by the boat builder to facilitate lowering / hoisting operations by using jetty crane. Further, the boat builder shall clearly indicate recommended periodic maintenance routines for the lifting arrangement.

38. **Anchor**. A CQR anchor weighing 18 lbs (for 4.7m RHB)/ 25 lbs (for 6.5m/ 7m RHB)/ appropriate size (for 10m RHB) shall be stowed on an anchor shoe on the foredeck. The anchor shall be connected to a 27m long, 16/20 mm diameter chafe resistant manmade braided rope of suitable strength (for better hand grip while heaving anchor and as per class), stowed on special hinged horns. A strong point should be provided for securing the anchor rope end along with a suitable stowage space for chain cable and rope in the bow area.

39. **Grab Rails and Toe Straps**. Every seat position shall be provided with suitably located handholds and foot straps. Hand rails shall be fitted in appropriate positions for the standing passengers. Toe straps shall be fitted for the coxswain when standing. A stainless steel grab-rail shall be positioned fore and aft amidships of the crew seating. Further two grab rails shall be mounted on the console, at forward and at sides.

40. **Life Saving/Rescue**. The following lifesaving equipment shall be provided (All stowed in a wooden box, secured to Deck at suitable position):-

40.1 One throwing quoits, complete with Buoyant line.

40.2 One first aid kit.

40.3 One distress signals box (signals shall be supplied by Navy).

} All stowed in a GRP box, secured to deck, fwd of the fore of the console

41. **Fire Extinguisher**. Manually operated fire extinguishers as per SOLAS requirement shall be secured on the side of the helmsman seat.

42. **Rescue Cradle (Jason's Cradle)**. One Rescue Cradle of Admiralty pattern and as illustrated in **Appendix – 'C'** shall be supplied with the boat. The Rescue Cradle is four rungs wide by fifteen rungs long and has a deployment strop that is adjustable to a maximum length of 1.1 meters. The cradle, which has a carrying trop fitted to the outside of the stowage bag, can be fitted to either the port or starboard collar. Probable sources of procurement for the same are also provided at **Appendix – 'C'**.

43. **Strong Points**. All Strong points designed and fitted for towing, anchoring, mooring etc. shall be fastened permanently to its position and tested with reference to ISO 15084, Small craft – Anchoring mooring and towing, strong points or relevant standards promulgated by any Classification Society.

44. **Removable 'RESCUE' Patch**. Four removable 'RESCUE' patches of 20x40 cm size made of white retro reflecting tapes shall be supplied with the boat.

45. **Boat Hook**. A boat hook shall be provided made of white cedar or buoyant light weight metallic hook with Stainless Steel (AISI 316) end hook.

46. **Tally Plates**. Instruction tallies in English engraved on Stainless Steel shall be located next to individual items of equipment, switches and adjacent to all gauges.

47. **Identification Marking**. The information listed below shall be engraved on a 1.5 mm thick SS plate, size: 75 mm x 100 mm. The identification bearing plate shall be clenched with 3 mm dia x 50 mm long SS screws after fixing with Araldite, one on the Starboard side bulkhead of wheel house and one on the port side of stern post, below the eye plate.

_____m RIGID HULL BOAT

Registration no..... (as given by NHQ)

Built in..... (Year in which boat is built)

Built By..... (Name of the Builder with station)

Carrying capacity.....

Weight (excluding crew).....

48. **Boat Rope Connection**. Sea boat rope connection shall be provided *iaw* ***IN*** specifications.

49. **Tools**. The following standard tools of a reputed manufacturer (One set each) shall be provided in suitable portable aluminium box (one set per boat) in addition to the special tools as recommended by OEM of all main machinery.

49.1. One Open Spanner set	:	10X12, 13X17, 14X15, 19X22
49.2. One Socket set	:	13X12.5, 15X12.5, 17X12.5, 19 X12.5, 22 X12.5, 24 X12.5, 27 X12.5,
49.3. T Handle	:	(One in no.)
49.4. One Extension for socket	:	12.5 X12.5
49.5. One set of Screw Driver	:	A.0 8X5.5X1.25
49.6. One set of Feeler gauge	:	0.2X0.45
49.7. Box spanner	:	One set.
49.8. Torque spanners	:	One set.

MACHINERY SPECIFICATIONS

50. Machinery specifications indicated in this section are applicable to 6.5m, 7m and 10m RHBs. Specifications pertaining to 4.7m are separately indicated in Enclosure 1.

51. **Engine Room**. Adequate space shall be available in the engine room to fit the engine as mentioned in this specification. Sufficient maintenance envelop is to be ensured for undertaking periodic maintenance routines. The engine room shall house the battery also. The engine room shall be accessed through **watertight hatch** of suitable dimensions to facilitate engine removal. Hatch coaming should be provided as per Class. Aluminium chequered plate floor shall be provided in the engine room.

52. **Machinery**. All machinery, equipment and fittings in the boat shall be compact and of light weight construction.

53. The propulsion system shall be of any suitable inboard diesel engine of suitable capacity/ rating coupled to reversible gear box driving with stern drive for achieving the desired parameters, with product support available in India. The inboard Diesel Engines shall be of proven marine propulsion duty design and shall be type tested and class approved for main propulsion service. A contemporary model may be selected so as to meet the specified maximum speed and endurance requirement of the boat. The boat builder shall take an undertaking from the engine manufacturer that spares support for the model will be provided for a period of 15 years.

54. **Main Engines (For Stern Drive)**

54.1. The Diesel Engine should be a four stroke, turbocharged, electrically started, sea water cooled diesel engine with engine driven auxiliaries for sea water, fresh water, fuel and lub oil. The power rating of the engine is **ICXN rating**, which is overloadable by 10% in accordance with ISO 3046-1:2002. The engine has to be class certified. The equipment should adhere to the **IACS, IMO** and **MARPOL** standards of pollution control.

54.2. The equipment shall be designed in accordance with environmental conditions as specified in below:-

Description	Value
Ambient Air Temperature	-15°C to Max 50°C
Max Relative Humidity	100% at 35°C
Max Ambient Sea water Surface Temperature	Upto 38°C
Salinity of Sea Water	36000ppm

Heel	20°, continuous on either side
Roll	Max ±25°, period of roll 10 sec
Trim	Max 5° continuous
Pitch	Max 8° with 6sec period

54.3. **Engine Operation**.

54.3.1 The engine shall be able to operate in both Ahead and Astern modes without any restriction caused due to limitation of associated systems.

54.3.2 Fuel control lever is to be fitted with an adjustable stop to limit the overload capacity.

54.3.3 The design of the engine and engine driven sea water pump should be such that the engine should be able to run without water up to 5 minutes without any detrimental effects. This to facilitate giving the helmsman immediate control of the boat as soon as it enters the water.

54.4. **Reliability**. The complete system should be capable of reliable and stable operation under all operating regimes for continuous period of 300 Hours with failure free operation at all regimes without planned maintenance at a reliability of not less than 0.99.

54.5. Complete package from engine to propeller to be provided by engine OEM and adhering to the specifications is the responsibility of the boat builder. The installation of the engine should be done by the engine OEM/ engine OEM authorized rep and a certificate to that effect is to be submitted to Indian Navy.

54.6. The installation of engine and associated arrangement/equipment etc. shall be in accordance with the manufacturer's recommendations to ensure smooth and trouble free operation. Full consideration is to be given for rapid removal of engine and stern drive, for their replacement by a spare unit.

54.7. The engine should have self-contained alternator producing sufficient amperage even at low RPM, to provide electrical supply to all navigation and communication aids, controls and auxiliaries.

55 **Engine Control (For Stern Drive)**. Engine control comprising engine starting/ stopping, speed and stern drive control, steering system, anti-vibration mountings, cooling systems, fuel system, exhaust system and bilge system shall be as per Class requirements.

55.1. **Engine Starting**. The engine shall be started by either by a 2 or 3 position (off/power/ignition) key switch and a start push-button. The starter motor used for engine starting shall be of IP67 or higher rating. There must be a dual-redundancy starting system with cross-connection. An electric starting system could provide cross-connection to an appropriately specified secondary battery. This battery need not be dedicated, but must remain charged at all times.

55.2. **Engine Speed and Stern Drive Control**. A single lever control head, sited at the helmsman console shall control engine speed and stern drive selection. Movement of the control lever shall be transmitted to the fuel injection pump and to the stern drive shift, through separate cables or by use of electronic throttle. The cables shall be secured to the side of the console and routed through the engine casing.

55.3. **Engine Stopping**. A separate bracket mounted engine stop control cable shall be provided on the forward face of the engine casing. Action of the cable shall pull the control rack on the fuel injection pump to the no fuel position, thereby shutting down the engine.

55.4. Engines shall stop automatically or be stopped by the Helmsman's emergency release switch should the boat capsize. When the boat has righted, engine shall be capable of being restarted.

55.5. A single lever control head, sited at helmsman console shall control engine speed and stern drive selection.

55.6. Movement of the control lever shall be transmitted to the fuel injection pump, and to the stern drive shift, through separate cables. The cables shall be secured to the side of the console and routed through the engine casing.

55.7. **Engine Instrumentation**

55.7.1 The instrument panel shall be mounted in front of the helmsman position and shall contain engine instrumentation and switching.

55.7.2 Cable wiring shall be loomed inside the console and fed through ducting to the engine compartment of the various services.

55.7.3 All instruments and switches fitted on command console shall be weather proof and shock resistant. All buttons shall be rubber sealed. All electrical controls and instrumentation are to be compliant to IP 67.

55.7.4 Meter illumination and warning lights shall be fitted with dimmers. All the gauges are to be fitted symmetrical to the wheel and should be easily visible to the helmsman.

55.7.5 The maximum permissible operating parameter is to be indicated on each gauge by a red mark. The instrumentation considered essential but not limited to, to be fitted on control panel shall include following:-

55.7.5.1 Engine oil pressure gauge.

55.7.5.2 Lub oil temp gauge.

55.7.5.3 Fresh water temp gauge.

55.7.5.4 Engine exhaust temp gauge.

55.7.5.5 Steering position indicator.

55.7.5.6 Ammeter, Voltmeter.

55.7.5.7 Lamp test switch.

55.7.5.8 Tachometer – to show engine rpm.

55.7.5.9 Fuel level gauge.

55.7.5.10 Speedometer

55.7.5.11 Water in fuel indicator

55.7.5.12 Tilt Trim indicator

55.7.6 Engine is to be equipped with safety or speed regulator which prevents the rated speed exceeding beyond 15 %.

55.8. **Alarm/ Trips**. Alarms/trips shall be provided to ensure safe exploitation of the engine. A list of alarms essential but not limited to, required to be provided for diesel engine is as mentioned below:-

55.8.1 Low Lub Oil Pressure

55.8.2 High Coolant temp

55.8.3 Engine Over speed

55.8.4 High Exhaust Temp

55.8.5 High oil temp (engine/Gearbox/Sterndrive)

55.9. **Wiring**. Cable Glands conforming to BS 6121/ EN 624440-2013 are to be provided. Cables specification and cable connector pins shall conform to **IACS Rules**.

55.10. **Cables**. All cable shall conform to IACS requirements.

55.11. **Shut down override.** Facility shall be available in control panel for overriding shut down manually as per IACS Requirements.

55.12. **EMI/EMC.** All equipment/system being fitted onboard shall be compliant to Class requirements. COTS items, if any, are to be compliant to IEC 60945 or IEC 60533 or equivalent standards. All the test plans and reports shall also be forwarded to PFT/NHQ.

55.13. **Dry-Run Bearing.** The engine should be fitted with a dry-run thrust bearing and dry-run sea water pump enabling the engine to be started and run for short periods (up to five minutes) whilst out of the water.

55.14. **Dry-Run Kit.** A dry-run kit shall be provided by the boat builder in consultation with engine OEM to facilitate running of engine on chocks.

55.15. **Deadman's Switch.** The boat should be provisioned with an emergency stop switch that is operated via a cord clipped to the coxswain. In the event of the coxswain falling overboard, the cord should operate the emergency stop switch causing the engine to stop instantly.

55.16. **Natural Safety Switch.** The boat to be fitted with natural safety switch to prevent the Engine from starting when the Gear gets engaged.

55.17. **Ventilation.** Engine room ventilation and exhaust arrangement should be as per Class requirements and in consonance with engine OEM recommendations.

55.18. **Emergency Steering.** Alternate steering post apart from Coxswain Command Console should be provided for emergency/backup operation.

55.19. **Fuel Supply Shut-off Valve.** An Emergency Fuel Supply shut - off valve to be provided outside of casing to prevent spreading of engine fire.

55.20. **Fire Fighting Arrangement**. Adequate fire fighting arrangement meeting Class requirement shall be provided. Additionally, the following shall be provided:-

55.20.1 Two CO_2 injection points on engine casing on either side and one injection point on Coxswain console to extinguish bilge/ engine/ electrical fire without opening the engine casing and suitable capacity CO2 cylinder.

55.20.2 Three nos each portable CO_2 and DCP extinguisher.

55.20.3 A fume/smoke detection system shall be fitted in the hold near the diesel tank and engine room with alarm at control console.

55.21. **Propeller/ Stern Guard**. ~~One~~ SS Stern guard shall be provided at transom for safety of sterndrive. The steering shall be from the helmsman position actuated by rim type wheel mounted at 45° to the vertical and transmitted by a hydraulic system to the Stern Drive Unit at the transom. Vessel steerage is achieved by movement of the out-drive unit. Stern drive shall have following: -

55.21.1 Max tilt angle 45° (adjustable)

55.21.2 Protective aluminum anodes to prevent corrosion

55.21.3 Built in kick-up function to reduce possible damage, in the event the drive strikes an underwater object.

55.21.4 Power Trim with one button operation in multiple installation.

55.21.5 Fully integrated water inlet and exhaust system

55.21.6 Hydraulic gear shift system with low-speed mode as standard

55.21.7 Water in oil sensor

55.21.8 Low oil level sensor

55.21.9 Compatible with 12V or 24V

55.21.10 Water in bellow sensor

55.21.11 Hydraulic trim and steering system oil filled at delivery

55.21.12 Oil filter for improved service life

55.21.13 Propellers shall be of a proven design and made of corrosion-free and erosion resistant material. Propeller and power transmission including steering system is to be designed iaw 'Guidelines for lifeboats & Rescue boats – Germanischen Lloyd Classification' / equivalent. Propellers shall be isolated to prevent corrosion and with line cutters as standard.

55.21.14 The connection of the propeller to the propeller shaft shall be of proven design, such as flanged, key taper connection, hydraulic connection. The cap nut is to be provided and shall be suitably secured.

55.21.15 All propellers shall be designed with due regard to the safety of persons in water and to possibility of damage of propulsion system by floating debris.

56 Cooling System

56.1. The engine cooling shall be achieved by utilizing two cooling circuits, a closed fresh water system and an open sea water system. The fresh water cooling system is to include an engine driven fresh water pump, expansion tank and sea water cooled heat exchanger. The sea water pump is to be also engine driven. Both sea water and fresh water pump are to be provided with tell-tale hole for indicating the failure of pump seal.

56.2. All sea water system pipes are to be made of 90/10 Cu/Ni. The externals of these pipes are to be painted with Chlorinated rubber paint. The seawater sides of the heat exchanger are to be provided with zinc corrosion plugs.

56.3. The design of the engine and engine driven sea pump should be such that the engine should be able to run without water up to 05 minutes without any detrimental effects. This to facilitate giving the helmsman immediate control of the boat as soon as it enters the water.

56.4. The seawater pump inlet is to be so located to avoid entry of entrained air from the propeller while running astern. The seawater pump inlet is to be provided with a seacock and a strainer. The strainer should be easily accessible for routine maintenance.

56.5. The sea water cooling system for the main engines should incorporate special filters/ mechanism for shallow/ muddy water operations. The filter must facilitate at least 30 minutes of operation in shallow/ muddy waters.

57 **Fuel System (For Stern Drive).**

57.1. LSHFHSD conforming to ***IN* DME Specification 512** is to be used as fuel oil. The engine shall be supplied with fuel from a fuel tank situated forward of the engine. The fuel shall be drawn from the tank, through a pre-filter by engine driven fuel lift pump. The fuel lift pump shall deliver the fuel to the fuel injection pump, a self-contained unit, with a camshaft and governor assembly operating separate pumping elements for each fuel injector. The remote throttle control lever, situated at the helmsman control console, via a stainless steel wire running in conduit. Additional auto draining water separator of adequate capacity shall be fitted at the tank outlet in addition to act as a refine filter in case of fuel contamination.

57.2. The fuel tanks shall be constructed of welded stainless steel AISI 316. Size of fuel tank shall be in accordance with fuel oil capacity specified and to be centrally mounted under the deck with a straight filler pipe with cap, vent pipe and filter. Cover plate for periodic cleaning the tank shall be provided. A calibrated dipstick with chart shall be provided and stowed on top outside of the engine casing. Fuel tank coaming height to be raised, WT hatch to be provided. The fuel tank shall be pressure tested *iaw* Class requirement and certificate shall be rendered. The fuel lines should be connected by means of adaptors.

57.3. The fuel suction pipe to the engine from the fuel tank should be two inches above the bottom of the tank to avoid entry of sludge/water in the fuel system. A 'water in fuel' indicator shall be fitted on the instrument panel for monitoring.

57.4. A snap over type fuel filler cap shall be fitted, aft of the helmsman. A flexible pipe, confirming to SAE 6 standard, secured by adaptors at each end shall be attached to the filler boss and fuel tank.

57.5. Drain valve to be provided in the discharge line of the fuel tank'.

58 **Lubricating Oil System (For Stern Drive)**.

58.1 The engine shall be supplied with its own inbuilt, closed lube oil system with engine driven lube oil pump directly coupled to the engine. The engine driven lub oil pump must be directly coupled and must be of gear or screw type (i.e. positive displacement pump). Each positive displacement pump is to be provided with a spring loaded relief valve, fitted on the discharge side and arranged to discharge to the engine sump/pump suction. A lub oil pump should be available to take care priming/ pre-lubrication of the engine during starting and stopping.

58.2 A suitable arrangement for draining the lubricating oil from the oil sump is to be provided. Oil sampling points should be provided in such a way that oil can be drawn without stopping the engine. Dip stick to be provided for checking the oil level in hot and cold condition and should be marked with minimum & maximum level. Lub oil/fresh water cooler shall conform to the requirements as per **IACS Rules**.

58.3 The Lub Oil System should cater for suitable filtration and centrifuging (if reqd) to ensure safe operation of the engine for entire range of operation. In order to maintain the required lub oil temperature at the engine inlet, self-actuating thermostatic valves shall be provided.

58.4 Crankcases, sumps and lubricating oil arrangements are to be effectively sealed against ingress of water, when flooded to the level of the underside of the output shaft. Limiting values for oil wrt metal content for undertaking advance oil analysis, % dilution and contamination allowed are to be indicated by DA.

58.5 Replaceable separate full-flow and by-pass oil filter, Seawater cooled tubular oil cooler, Oil level and oil temperature sensors and Crankcase oil separator, shall form part of lub oil system.

59 **Air Intake System (For Stern Drive)**. The diesel engine shall be taking suction from the atmosphere, through air filters and via trunking to turbocharger inlets. Additional air filters, if required shall be provided at the main engine turbochargers and should be easily accessible for routine maintenance. The air intake filters shall be fitted with a water draining system. The material used for Air Induction System is to be marine grade.

60 **Exhaust System**. Exhaust gases shall be discharged through the transom. The exhaust system should be so designed to withstand the exhaust gas temperature corresponding with full-specified performance without any adverse effect on life. The exhaust system should be corrosion resistant to withstand corrosion attack by the product of combustion at low temperature, when the machinery is running at low power and saline atmosphere. Exhaust system shall not restrict astern movement of the boat. The exhaust pipe should be provided with suitable thermal insulation. *'Exhaust system should be provided with drain valve to avoid ingress of water into engine'*.

61 **Noise and Vibration (For Stern Drive and OBM).** The following standards shall be adhered to in respect of Noise and Vibrations for all machinery during their performance evaluation, type testing and FET:- Vibration- ISO 0816-6 *iaw* Machine Vibration Classification Number 4.

62 **Mounting Arrangement (For Stern Drive).**

62.1 The engine shall be longitudinally aligned with steel tapping plates moulded into the longitudinal bearers in the hull in way of the engine mounting feet.

62.2 The engine shall be suitably located to meet the stability requirements.

62.3 The engine together with power transmission & Stern drive unit is to be such that alignment is preserved under all operating conditions. The alignment of the propulsion component is to be preserved by the use of spigots, a proportion of fitted bolts or dowels.

62.4 The holding down requirement should take into consideration the requirement for rapid removal of engine aggregate, and their replacement with a spare unit.

62.5 The engine shall be bolted onto anti-vibration mounts, which are to be bolted in to hull. These should be Oil proof elastic mounts.

62.6 The mountings bolts shall be secured with self-locking nuts of nylon insert type.

62.7 To facilitate routine inspection and removal of mounting, permanent jacking or lifting device to be incorporated such that all mounts can be removed at the same time.

62.8 In addition, since the correct functioning of mounts is greatly affected by flexibility of other connection to hull, all such connections are to be provided with rubber durites/ flexible connections.

63 **Materials**. A component wise material specification used for the construction of Diesel Engine, heat exchangers, pumps, piping systems, etc. must comply with **IACS Rules**. The unions shall be provided, for screwed connections. All cooling water heat exchangers external to the engine should be of Cu-Ni / plate type (Titanium) suitable for operation in a marine environment. Zinc Protectors will be provided in end covers. The design of heat exchanges shall be as per **IACS.**

64 **Submersibility**. The engine shall be capable of operating when the boat is flooded up to the center line of crank-shaft.

65 **Bilge System**

65.1 RHB shall be capable of completely clearing the green water/hull cavity/ bilges through pumps/ self - draining scuppers (elephant trunk) on transom (fitted with self-opening/ closing flap).

65.2 All the lower cross of longitudinal bearers shall be provided with limber holes (only in engine compartment). This should allow drainage of water to the aft end. A float operated electric motor driven pump of suitable capacity with 100% redundancy is to be primary mode of pumping out bilge. The pump is to be mounted aft at the transom. The pump shall draw bilge water from the aft bilge through a reinforced nylon pipe, secured to the pump suction boss by worm drive clips, the discharge hose being similarly connected. The pump discharge shall be routed through the engine casing at deck level discharged by natural drainage over the aft deck and overboard through the non-return flaps fitted in the transom. Operation of the pump shall be by spring loaded switch situated below the steering wheel on the helm console.

65.3 Secondary pumping shall be provided by means of a hand operated double acting pump mounted in the engine compartment aft end. The capacity of the pump is to be 60 LPM. The discharge shall be similar to the electric pump, the suction pipe being able to reach the aft void bilge of the engine compartment bilge.

65.4 A detachable bilge strainer is to be provided at the entry point of suction. It is to ensure removal of water to the lower most point before any perforations are uncovered in order to ensure complete removal of bilge.

65.5 The motor driven and hand bilge pump shall be procured as per Class. The sea water pipe line shall be of as CuNi 90/10 grade.

65.6 **Bilge Alarm System**. The engine room should be provided standard marine version bilge alarm system to indicate bilge accumulation/flooding in the engine room with rugged wiring and sensors.

ELECTRICAL REQUIREMENTS

66 Complete electrical installation including layout of cables will be as per Class requirements. Cables used will be electron beam irradiated cross linked type and to be approved by Class. No electrical fittings/ cables to be provided for engines at the bottom near the bilges to maintain better electric hygiene. All cables and wires used must be LFH (Low fire Hazard) cables.

67 All electrical fittings/ switches should have IP 66 rating or above. All sockets are required to be provided along with mated plugs.

68 All cables, control boxes and electrical fittings shall be well clear of the bilges *iaw* Class rules. Installation of electrical systems and equipment/ fittings not specified in this NCD shall be *iaw* Class rules/ HSC/ Light crafts in GRP/ composite construction. The boat starter must be well protected inside a casing from ingress of water and muck from the bilges. The cables shall be routed on cable trays/ conduits. WT cable glands shall be used for all hull / console penetrations.

69 Electrical/ Engineering emergency arrangements would be provided *iaw* Class rules.

70 **Special Ops Socket**. One Special Ops socket shall be provided adjacent to the battery charging socket to enable power to be supplied from the boat via an external 'wander lead'.

71 **Engine Start Control**. The engine start shall be controlled by a 2 position (off/ignition) key switch and a start push-button. Under normal starting conditions the 10 amp circuit breaker shall connect the 12 Volt Positive supply from the battery to the engine start key switch. Appropriate secondary battery to be provided for redundancy of the starting system.

72 **Batteries**. Suitable number of Maintenance Free batteries of Contemporary technology suitable for boat engine cranking operations to be provided. The house battery is to cater for total electrical load for three hours onboard, with 100% redundancy (spare batteries). Provision for charging these batteries by engine and through a suitable battery charger from mother ship/shore to be provided. A suitable battery charging socket of **IP66** rating or higher shall be mounted on console for charging the batteries. The distribution panel shall be located in the helmsman console, with isolation/change over switch facility for battery charging. Low battery Charge indicator is be fitted on the console.

73 **Search Light**. A fixed electrically operated Search light with 360° rotation and elevation, operated by coxswain, shall be supplied and fitted on boat with standards as specified in terms of parameters stipulated in LSA code [Resolution MSC.48(66)] vide Article 5.1.2.2.11. The wattage of search light being selected shall be compatible with the standard electrical supply available in the boat. Search light should be capable of effectively illuminating a coloured object at night having a width of 18 m at a distance of 180 m for a total period of 6 hours of working for at least 3 hours continuously. Additionally, two portable (hand held) search lights to be provided.

74 **Lighting**. The 12 Volt positive supply shall be connected from the bus-bar to the following lighting circuits as described:

74.1. Navigation lights - through a circuit breaker of suitable rating and switch.

74.2. Panel and Compass lights - both supplied through a common circuit breaker of suitable rating, and individual switches.

74.3. NUC and Special Ops Lights - both supplied through a common circuit breaker of suitable rating to the NUC and SO sockets for temporary lighting.

75 **Loud Hailer**. A fixed Loud Hailer with 360º rotation, with Siren and microphone fitted on Coxswain Console to be provided.

76 **Electric Horn**. A marine electric horn of 'type approved' by class be supplied and fitted on Coxswain console.

77 **Navigation and Communication Aids**

77.1 **Navigation Lights**. Navigational lights shall be provided *iaw* International Regulations for the Prevention of Collision at Sea 1972 (IRPCS).

77.2 **GPS Plotter**. A portable GPS Plotter with map and waypoint facility shall be mounted near the console as per ***IN*** specifications (These specifications are applicable for 4.7m, 6.5m and 7m RHB. For 10m RHB, refer **Encl 4**). The GPS Plotter shall:-

77.2.1. Have a sunlight viewable 7” TFT bright colour LCD.

77.2.2. Be compatible with C-Map NT+ chart cards.

77.2.3. Have dual SD card slots for memory and chart cards.

77.3 **VHF MMB Set.** Weather proof programmable VHF MMB with DSC feature for distress calling, battery backup and noise cancelling hands free headphone and speaker arrangement for coxswain. VHF MMB set shall be mounted on the Console as per ***IN*** specifications, where channels can be programmed as per NHQ guidelines so as to be compatible with Motorola sets (These specifications are applicable for 4.7m, 6.5m and 7m RHB. For 10m RHB, refer **Encl 4**).

78 **Mast**. A suitable collapsible tubular Stainless Steel AISI 316L goalpost frame mast shall be mounted at the stern with brackets and fittings for mounting of the following on 6.5m, 7m and 10m RHBs:-

78.1 Nav lights/ shapes and aerials.

78.2 Antennae of Navigation and Communication equipment.

78.3 Jack Staff to fly a flag/ Ensign.

78.4 Strobe light

78.5 A horizontal safety bar shall be positioned approximately 460mm above the transom top.

79 For 4.7m RHBs, a collapsible integrated stump mast shall be provided with all rough white light and combined red/ green side of relevant IP standards (SS 316L). Nav lights are to be fitted as per IRPCS. Provision for erecting aerial shall be provided on the mast.

80 **Wiring/Circuit Diagram**. A metallic plate with engraved wiring/ circuit diagram to be fitted on console for ready reference. Suitable marking and tagging of wiring/ cables shall be carried out.

81 All electrical equipment/ fittings are to be class approved. Navigational lights are to be IMO/ MMD certified/ cleared.

DRAWING & DOCUMENTS

82 **Drawings**. Once the contract has been placed, the ordering of long delivery items, e.g. engines, gearboxes, fittings may be progressed, but no construction shall commence until the following drawings are approved by Class. Post approval of drawings, the Builder shall forward to NHQ/ Command two copies of following drawings with estimated weight of structure, equipment etc.

82.1 Faired lines plan with table of offsets.

82.2 Model test report

82.3 Hydrostatic curves and stability calculations.

82.4 Detailed General Arrangement.

82.5 Weight book indicating CG of each items in X, Y & Z directions.

82.6 Structural drawings with GRP lay-up scheme duly approved by Classification Society. These should include following:

82.6.1 Sections showing longitudinal and transverse strength members

82.6.2 Profile and decks

82.6.3 GRP lay-up scheme

82.6.4 Watertight bulkheads

82.6.5 Integral tanks

82.6.6 Aft end/ transom construction

82.6.7 Engine room construction (only for 6.5/7/10m RHB)

82.6.8 Fore end construction

82.6.9 Longitudinal and transverse framing system

82.6.10 Lifting Arrangement

82.6.11 Command console detail

82.6.12 Collar detail

82.6.13 Collar securing arrangement drawing

82.7 Following Class approved system drawings are to be submitted subsequently to NHQ/ Command but before commencement of fitting out work:-

82.7.1 Engine cooling (FW/SW) system. (only for 6.5/7/10m RHB)

82.7.2 Bilge system.

82.7.3 All Machinery seating / installation drawings/ OBM/ engine attachment drawings, illustrating Engine support, control panel position and details.

82.7.4 Fuel oil/L.O system with storage tanks.

82.7.5 Drawing of switch panel, control panel etc.

82.7.6 Diagram of connections details and schematic.

82.7.7 Details of type, make and rating quality of switches, fuses, instruments etc.

82.7.8 Deck plan of the craft showing position of all equipment/ light fitting etc and routing diagram of electric cables.

82.8 Complete wiring circuit diagram of all electrical fittings and the controls.

82.9 Where applicable each drawing shall show the scantlings of all fittings, reference to material specifications, method of fitting/working and the location.

83 **As Fitted Drawings/Documents**.

83.1 On successful completion of all tests/trials and prior to the delivery of the specific boat, the Builder shall supply original OEM issued documents/ drawings as per following distribution: -

83.2 One set per contract to NHQ/DNA with soft copy.

83.3 One set to consignee with each boat.

83.4 One set per contract to *IN* Inspecting Agency.

83.5 One set to Command HQ / MO.

83.6 Following drawings/ documents are to be supplied by the Builder: -

83.6.1 Copies of as fitted drawings / documents for serials listed at section 39.1 to 39.7 above.

83.6.2 **Boat Hand Book**. Containing brief description of all features of the boat and its photographs from various angles. This should cover following in brief:-

83.6.2.1 Purpose
83.6.2.2 Identity
83.6.2.3 Speed
83.6.2.4 Endurance
83.6.2.5 Displacement & weighing test certificate
83.6.2.6 Draught corresponding to displacements
83.6.2.7 Principal Dimension
83.6.2.8 Environmental limitation
83.6.2.9 Manning requirement
83.6.2.10 Carrying capacity
83.6.2.11 Brief description of lifting arrangement and precautions to be observed by the user.
83.6.2.12 Safety equipment provided
83.6.2.13 Fuel and coolants to be used as recommended by OEMs.
83.6.2.14 List of principle drawings and documents.

83.6.2.15 Brief operating instructions on main engine/ OBM.
83.6.2.16 Parameters of stability
83.6.2.17 Collar fitment and removal instructions
83.6.2.18 Care and maintenance of collar
83.6.2.19 Any limiting criteria for operation and maintenance.

83.6.3 Original OEM Operation/ maintenance manuals/ CPL/ PIL of main engine/ OBM, steering system and Pumps as applicable shall be handed over with each boat.

83.6.4 Electrical Technical and Operating Manuals for Automatic Fire Detection, Control Panel, Navigation Panel, GPS and Communication sets.

84 **Photographs**. One soft copy (only to NHQ) and one enlarged colour printed copy of the following views as photographed: -

84.1 Full stbd. Profile view on transom showing propeller, rudder etc, with boat out of water on chocks.

84.2 A view of the bow to show lines of the boat (out of water).

84.3 Starboard profile of boat in water (preferably looking down on the boat).

84.4 A view on starboard bow (approx. 45^0 to centre line).

85 **Equipment schedule (D-787)**. The boat builder is to prepare an equipment schedule covering all items provided on boat as per this NCD, giving their make, model number, material specification, original supplier and their address. Equipment schedule is to be submitted to Inspecting agency for approval at least four weeks prior to pre-despatch inspection. The boat is to be handed over to consignee as per the approved equipment schedule. Equipment schedule is to contain following (Sample of the same may be obtained from the NHQ/ Command on placement of order): -

85.1 Certificate “A”- contains handing / taking over statements from the builder to consignee.

85.2 Certificate “B” – contains statement of transfer of Boat between Naval Unit.

85.3 Certificate “C” – contains handing / taking over statements between the Naval Officers responsible for the boat.

85.4 List of Documents supplied

85.5 List of As fitted Drawings

85.6 List of fitted items (Hull/ Engineering/ Electrical)*

85.7 List of loose items (Hull/ Engineering/ Electrical)*

85.8 List of on board spares (Hull/ Engineering/ Electrical)*

85.9 List of Tools supplied*

85.10 List of B&D spares (Engineering/ Electrical)* (held at MO)

85.11 Blank Form for utilisation of OBS (Hull/ Engineering/ Electrical)

85.12 All the relevant load test certificates

85.13 Certificate of class

Note: '*' indicates INCAT numbers should be mentioned for each of the items.

86 **Report of Tests and Trials**. All tests and trials carried out by Class/ Overseer are to be compiled into a book form by the boat builder and a copy of same is to be forwarded to the consignee along with the boat with a copy to NHQ/ Command. Following reports are to be included: -

86.1 PDI Report, Weight record, Test and Trials report as specified in the NCD including Speed vs RPM curve.

86.2 Certificate of approval by Govt. authorised agencies for Life saving appliances.

86.3 Report of Final Inspection

86.4 Form IN 701-Certificate of test for boat slings and lifting points

86.5 Boat Warranty certificate

87 **Boat Log Book**. A printed blank book containing specific forms (Sample placed at **Appendix 'H'**) is to be supplied with the boat to record repairs / maintenance/ transfer undertaken during the life cycle of the boat.

PROGRESS MONITORING

88 Immediately after placement of order within two weeks, Boat builder is to forward the following to Indian Navy /nominated Inspecting Agency:-

88.1 **Cardinal Date Programme (CDP)**. A Cardinal date plan conforming to the delivery schedule as per the Purchase Order, indicating all stages of construction/inspection and tests/trials till the delivery. This CDP is to be prepared boat wise.

88.2 **Quality Assurance Plan (QAP)**. A Quality Assurance Plan for all production processes is to be prepared by yard and approved by Class which shall include a diagrammatic representation (flow chart) of each process in sequence showing various controls and checks employed. QAP shall be submitted to Indian Navy for final approval. Guideline QAP placed at **Appendix 'A'** for reference.

LIST OF FITTINGS, ACCESSORIES, ONBOARD AND B&D SPARES

89 **Fittings and Accessories to be Supplied**. The fittings as per **Appendix 'B'** and mentioned elsewhere in this NCD shall be supplied with the boat. Mandatory sea going accessories as per **Appendix 'D'** are to be supplied with the boat. Any other minor fittings not specified herein but required as per standard practice are to be supplied/fitted by the builder without any extra cost.

90 **Guidance Format for Onboard and Base & Depot Spares**. The details of OBS and B&D spares shall be submitted in ILMS format indicated at **Appendix 'E'.** List of onboard and B&D spares as promulgated in respective Enclosures shall be forwarded along with technical bid as per the guidance format considering the following points:-

90.1 List of Onboard spares (all spares as per list placed at **Appendix 'F'**) should be incorporated. Any deviation or non-compliance to be justified in remarks columns.

90.2 List of B&D spares should include Major assembly, Sub assembly, OBS spares, TOH spares and MOH spares as indicated in Appendix 'F'. Any deviation or non-compliance is to be justified. Mandatory and anticipatory spares are required to be listed separately.

90.3 Item wise Part No. of all equipment to be indicated.

90.4 The Qty of service fluids (20 litres) is indicative. Any additional requirement is to be indicated. All service fluids to be available commercially and their Indian equivalents or alternatives to be indicated.

90.5 Quantity of B&D spares required per set is to be indicated in "Qty/Set" column.

90.6 The total Qty of B&D spares in 1:4 ratio (i.e 1 set of B&D spares per four Boats) is to be indicated in Column "Total Qty".

91 **OBS and B&D Spares**. List of On Board Spares and B&D spares that are to be supplied along with the RHB is placed at **Appendix 'F'**.

INSPECTIONS, TESTS & TRIALS

92 The various tests and trials which are to be carried out by the Builder to the satisfaction of classification society, NHQ/ Command for acceptance of the boat are enumerated at **Appendix 'G'**. A programme of trials shall be prepared by the Builder in consultation with the Inspecting agency/Indian Navy and detailed reports of tests and trials carried out are to be forwarded to Indian Navy through Inspecting Agency. Composition of teams for witnessing of various tests and trials are as follows: -

Ser No	Activity a.	Composition b.	Remarks c.
New Construction Projects			
1	FATS	NHQ/ DNA	Only for first boat of the Order
		WDB/ DSP or WOT	For all boats of the Order
		Ship's Staff/ User rep	If ship's cell has been formed
2	PDI	NHQ/ DNA	Only for first boat of the order
		WDB/ DSP or WOT	For all boats of the Order
		Ship's Staff/ User rep	If ship's cell has been formed
3	JRI	WDB/ DSP or WOT	For all boats of the Order
		Ship's Staff/ User rep	If ship's cell has been formed
Replacement Boats			
1	FATS	NHQ/ DNA	Only for first boat of the Order
		Command HQ	For all boats of the Order
		Ship's Staff/ User rep	
2	PDI	NHQ/ DNA	Only for first boat of the order
		Command HQ	For all boats of the Order
		Ship's Staff/ User rep	
3	JRI	Command HQ	For all boats of the Order
		MO/ Ship's Staff/ User rep	

DESPATCH/ RECEIPT OF BOAT

93 **Despatch of Boat**. Post successful completion of PDI, Boat builder is to despatch the boat to concerned Material Organisation/ Establishment.

94 **Receipt of Boat**. Boat builder is to liaise with concerned unit to enable smooth handing over of the boat with OBS as per the approved Equipment

Schedule (D-787) supplied with the boat. As a standard practice representatives of the boat builder are to set the machinery to work and demonstrate operation of the boat to ship's staff.

95 **Deficiency Report**. Deficiencies reported at the time of boat receipt will be made good by boat builder at the earliest.

TRAINING

96 Builder should provide free training on operation/ maintenance to 03 officers and 07 other ranks. Training may be conducted during acceptance trials. The trainees should also include personnel from maintenance agency like FMUs/Dockyard/ NSRY etc.

Appendix – 'A'

(Refer Para 20)

QUALITY ASSURANCE PLAN

Ser No	Stages of Inspection		Scope of Inspection	
			Navy	Class
1.	**Workshop**		Review	Approval
2.	**Design**			
2.1	Lines Plan		Approval	Review
2.2	GA including seating plan		Approval	Review
2.3	General notation for Class		Review	Approval
2.4	Model Test / CFD Study		Approval	Review
2.5	Stability calculations		Review	Approval
2.6	Hull Structure calculations		Review	Approval
2.7	Weight Calculation		Review	Approval
2.8	Fire safety and protection plan		Review	Approval
2.9	Engineering Calculations		Review	Approval
2.10	Electrical Installations		Review	Approval
3.	**Material**			
3.1	GRP		Review	Approval
3.2	Buoyancy Foam		Review	Approval
3.3	Collars (Fabric & Foam)		Review	Approval
3.4	Outfitting (Hull, Engineering & Electrical)		Review	Witness
4.	**Manufacturing Process**			
4.1	Mould Inspection		Witness	Witness
4.2	Lay-up Process		-	Witness
4.3	Machinery Installation		Review	Witness
			Should meet recommendations of OEM.	
4.4	Electrical Installation		Review	Approval
5.	**Technical Tests and Trials**			
5.1	Swamp Test	To be undertaken for prototype only	Witness	Witness
5.2	Deflection Test		Witness	Witness
5.3	Impact Test		Witness	Witness
5.4	Drop Test		Witness	Witness
5.5	Inclining Experiment		Witness	Approval
5.6	Weighing Test		Witness	Witness
5.7	Floatation Test		Witness	Witness
5.8	Lifting Trials		Witness	Witness
5.9	Anchoring Trials		Witness	Witness
5.10	Mooring Trials		Witness	Witness
5.11	Speed Trials (Light, Full and Emergency loading conditions)		Witness	Witness
5.12	Endurance/ Sea Trials		Witness	Witness
5.13	Manoeuvrability Trials - Turning Circle - Astern Trials - Crash Stop		Witness	Witness

Appendix – 'B'
(Refer Para 32)

EQUIPMENT/FITTINGS TO BE SUPPLIED WITH BOATS (FOR 4.7, 6.5 AND 7M RHB)

Ser No.	Description	Qty
1.	Weapon Mount	01
2.	Mooring cleats (1 fwd & 2 aft)	03
3.	Calibrated fuel tank with dipstick	01
4.	Fuel filler cap key	01
5.	Drogue Fairlead (fitted on collar)as per ***IN*** Specs (for 6.5, 7m RHB only)	01
6.	Bow Fairlead (fitted on collar) – for 4.7m RHB only	01
7.	Stern Fairlead (fitted on collar)	02
8.	Stern Fairlead (fitted on transom)	02
9.	Bow Negro Head Bollard (equivalent to fairleads)	03
10.	Navigation lights	*iaw* IRCPS
11.	Goal Post Mast with Support Frame – for 6.5, 7m RHB only	01
12.	Stump Mast with Support Frame – for 4.7m RHB only	01
13.	Sea Anchor, Stowage bracket, deck eye and line	01
14.	Towing eye 'U' bolt through stem	01
15.	Buoyant Paddles with stowage pockets fitted on collars	02
16.	Boat Hooks with stowage pockets fitted on collars	02
17.	Box stowage	02
18.	Lifting Slings	02 set
19.	Mooring rope stowage (collar mounted)	02
20.	Electric bilge pump – for 7m RHB only	01
21.	Semi-Rotary Hand Pump – for 4.7m RHB only	01
22.	Manual double acting bilge pump – for 7m RHB only	01
23.	Instrument panel spray cover	01
24.	Charging socket	01
25.	Watertight plug and socket (NUC) and special Ops light	02
26.	Identification plates	02
27.	Tallies	01 set
28.	Collar repair kit	02
29.	Anchor CQR type 18/ 25 lbs with stowage	01 set
30.	Anchor cable 16 mm	27 m
31.	Fire extinguishers	As per SOLAS
32.	Compass	01

Ser No.	Description	Qty
33.	Hand flares with stowage	06
34.	Distress signal box with stowage	01
35.	First aid kit with stowage	01
36.	Life jackets (HDLJ Type) as per NCD 3926	14 (4.7m RHB) 14 (6.5m RHB 18 (7m RHB)
37.	Search light	01
38.	Special tools for overhaul of engine	01 set
39.	Electric horn Marine Grade	01
40.	Weather Proof Cover for the entire boat and main console	01 Set Each
41.	Loud hailer	01
42.	GPS	01
43.	VHF MMB Set with accessories	01
44.	Buoyant Towing Line (27M 16mm dia braided rope)	01
45.	Rescue Quoits (Thrower and 30m Buoyant Line)	01
46.	Radar Reflector	01
47.	Buoyant Bailer	01
48.	Buoyant safety Knife	01
49.	Whistle	01
50.	Water proof electric torch (suitable for Morse signalling with one spare set of batteries and bulb)	01
51.	Starter Motor	01
52.	Boat Bag iaw BR 67	01
53.	Jason Cradle with associated fittings iaw BR 67	01
54.	Stern Guard – for 6.5, 7m RHB only	01
55.	Wooden toggle (teak wood) as per BR 67/09	02
56.	Three legged bridle arrangement with ring as BR 67/09	01 set
57.	Sea Boat rope (24 mm polypropylene)	01
58.	Painter and Sternfast rope (16mm)	01 each
59.	Forward steadying line (16mm)	01
60.	Removable Strobe light	01
61.	Removable rescue patches	02
62.	Batteries for starting engine (one main and one secondary for redundancy)	02
63.	Transportation Trailer suitable for towing using MT Vehicle (for 10m RHB only)	01
64.	Stowage Chocks (for 10m RHB only)	01

LIST OF EQUIPMENT/FITTINGS TO BE SUPPLIED WITH 10M RHB

Ser	Description	Qty
1	Transportation trailer suitable for towing using MT vehicle	01
2	Stowage chocks	01
3	Synthetic webbing slings	02 sets
4	Weather proof cover for entire boat	01
5	Weather proof console cover	01
6	Safety helmets	06
7	Light weight fenders	04
8	Suitable anchor with Chain and rope arrangement	01
9	First aid kit	01
10	Emergency damage control kit to repair minor damages	01
11	General Service Life Jackets (GSLJ Type) as per NCD 3925	20
12	Hazardous Duty Life Jackets (HDLJ Type) as per NCD 3926	06
13	Boat bag as per BR 67	01
14	Lifebuoy with lifeline iaw article 06033 of BR 67/2009 (Admiralty Manual of Seamanship) with stowage arrangement	01
15	Rescue Quoits (Thrower and 30 m Buoyant line)	02
16	Rescue cradle with associated fittings	01
17	7 X 50 Marine Binocular	02
18	Night Vision Binocular, JSQR 6650-003, Jan 2010	02
19	Lightweight Aluminium alloy boat floatable hooks	02
20	Lightweight Aluminium alloy boat floatable Oars	04
21	Weather proof VHF MMB with DSC feature for distress calling, Battery backup and noise cancelling hands free headphone and speaker arrangement for coxswain	01
22	***IN*** approved Hand held VHF Radio with battery charger, spare batteries, noise cancelling hands free headphone and water proof bag	02
23	Fixed Search Light with 360° rotation (Remotely controlled from Coxswain Position)	01
24	Portable (Hand held) search lights	02
25	Strobe Light	01
26	Loud hailer	01
27	Electric siren	01
28	Fixed gun mount at bow for MMG/LMG as per *IN* Specifications	01
29	Portable / Retractable gun mount on either side at stern for MMG/INSAS as per *IN* Specifications	02
30	Portable CO_2 fire extinguisher	02
31	Portable DCP fire extinguisher	02
32	Portable water storage tank (40 ltrs) with stowage	01
33	Foldable stretcher	02
34	Staghorn	02
35	Mooring Cleats (1 Fwd & 2 aft)	03

Ser	Description	Qty
36	Calibrated fuel tank with dipstick	01
37	Fuel Filler Cap key	01
38	Bow fairlead (Fitted on Collar)	01
39	Stern fairlead (Fitted on Collar)	02
40	Stern Fairlead (Fitted on transom)	02
41	Negro head Bollard (Positioned commiserating to fairleads)	03
42	Sea anchor, Stowage bracket, deck eye and line	01
43	Charging Socket	01
44	Watertight plug and socket (NUC) and special Ops light	02
45	Hand signalling lamp with stowage	01
46	Compass with stowage	01
47	Distress signal box with stowage	01
48	Hand flares with stowage	06
49	Manual line thrower	01
50	GPS plotter	01
51	Buoyant towing line	01
52	Radar reflector	01
53	Buoyant bailer	01
54	Buoyant safety Knife	01
55	Whistle	01
56	Water proof electric torch (Suitable for Morse signalling with one spare set of batteries and bulb)	01
57	Special tools for overhaul of engine as per OEM	01 set
58	Portable battery operated bilge pump	01
59	Bow fairlead as per *IN* specification	01
60	Man Overboard Rescue Stretcher (MORS) with double rescue strop	01
61	Three legged bridle arrangement with ring as BR 67/09	01 set
62	Wooden toggle (teak wood) as per BR 67/09	02
63	Sea Boat rope (24 mm polypropylene)	10m
64	Painter and Sternfast rope (16mm)	10m each
65	Forward steadying line (16mm)	15 m
66	Buoyant Towing rope (16mm, braided rope)	27 m
67	Boat Lifting hook with lifting ring	01 set

Appendix – 'C'
(Refer Para 42)

RESCUE CRADLE (ADMIRALTY PATTERN)
(JASON'S CRADLE)

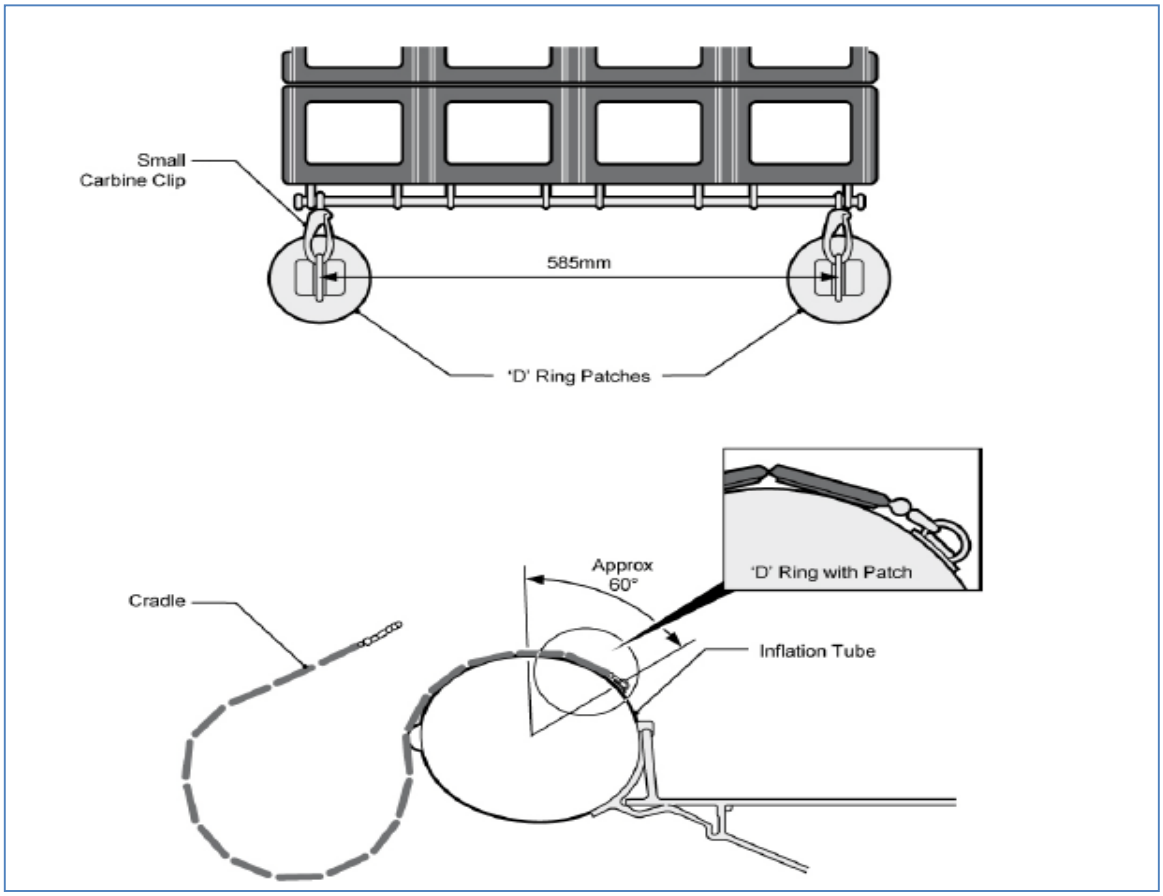

Known Sources

Mr. Danny Ng,
M/s Viking Life Saving Equipments Pvt Ltd, Singapore
Tel: (65) 6424 9200
Email: DNG@viking-life.com

Mr. Tomy Teo
M/s DEF-TECH(S) Pte. Ltd, Singapore
Tel: (65) 6295 9585
Email: tomyteo@singnet.com.sg

Note. Any other known Indian/ Foreign vendors capable of supplying 'Admiralty Pattern Jason's Cradle' also be considered. Details of the same be submitted along with technical bid.

Appendix – 'D'
(Refer Para 83)

STANDARD LIST OF SEA GOING ACCESSORIES

Ser No.	Description	Qty
1	VHF hand held radio	01
2	Buoyant Paddles	02
3	Manual Line Thrower	01
4	Horn	01
5	4 x Distress Flares (to be removed in harbour)	01
6	Buoyant Bailer	01
7	Bellows	01
8	Sea Anchor	01
9	Spare 'Kill cord' (ready to hand)	01
10	Compass (fitted on console)	01
11	Boat Bag iaw BR 67	01
12	First Aid Kit	01
13	* Radar Reflector (See Para 05054 of BR67)	01
14	Emergency starting cord	01
15	Fuel lead, fuel filter, and fuel lead adaptor (if required)	01 each
16	Spare fuses	01
17	Spark plugs	02
18	Socket and torque handle for spark plug removal	01
19	Pliers	01
20	Screwdriver	01
21	* Spare propeller, nut washer and split pin	01
22	* Suitable socket for propeller removal	01

Note. Items marked with * are carried in the boat at Commanding Officers discretion.

Appendix – 'E'

(Refer Para 84)

GUIDANCE ILMS FORMAT FOR OBS AND B&D SPARES

ILMS FORMAT – DETAILS OF ITEMS FOR INCATING													
OEM Item code (Max 24	Item Description Max 60	OEM Equipment Code (Max 60	Equipment Description (Max 60 Characters)	DENOMINATION (No/Set/Kg/Ltr)	CRP Category (Consumable, Returnable,	VED Category (Vital (under 10%), Essential (under 20%) Desirable (80%)	EASK type (Equipment, Assembly, Sub-assembly & Kit)	EASK BOOK REF/PIL/DRAWING REF (Document number of PIL & details of item)	QUANTITY CONSTITUENT (Numbers in each equipment-applicable for assemble for	QUANTITY OBS (As per range & Scale)	Quantity B & D (As per Range & Scale)	Price (in Currency)	Price reference (with copy)

Appendix – 'F'
(Refer Para 85)

LIST OF ON - BOARD SPARES- ENGINEERING

Ser No.	Description a.	Qty b.
1	Filter (Fuel, Oil, Air)	03 set each
2	Hoses (Different sizes as applicable)	01 set each
3	Switches, Bulbs/LEDs, circuit breakers/Fuses)	01 set
4	Full Set of Injectors	01 set
5	Piston and Connecting Rod Assembly (not applicable to 4.7m RHB)	01 set
6	Hand Tools/Special tools	01 set
7	Belts (Different Sizes as applicable)- Sizes and part no to be indicated separately	04 sets
8	Sensors/thermocouple (ambient air, water in fuel, coolant level, pressure/temp sensors)	01 set
9	Cylinder liner kit with piston and piston rings	01 set
10	Gaskets (Various sizes)- Sizes and part no to be indicated separately	01 set each
11	Pump repair kits (for all pumps)	01 set each
12	Gauges (lub oil Pressure, Coolant press, L O temp etc)	01 set of gauges
13	Solenoids (as applicable)	01/RHB
14	Zinc anodes of all applicable sizes	03 sets (as applicable)
15	Engine Gaskets (cylinder head gaskets, others as applicable)	01 set each
16	SV Mounts/Vibration isolators (not applicable to 4.7m RHB)	01 set
17	Turbo Charger repair kit as applicable (not applicable to 4.7m RHB)	01 set
18	Injector repair kit	01 set
19	Intake/Exhaust VV set/valve springs/Push rods	01 set
20	Complete O-ring kit (Different Sizes)- Sizes and part no to be indicated separately	01 set each
21	Bearing kit as applicable (ball/roller, Bush Bering)	01 set

22	Service fluid such as lub oil (20 ltrs), Coolant (20 ltrs) and other fluids as applicable	To sustain for 01 ops cycle
23	Strainer	04 Nos
24	Propeller	01 No
25	Starter Complete	01

LIST OF ON - BOARD SPARES – ELECTRICAL

Ser No.	**Description a.**	**Qty (Nos/ Sets) b.**
1	Emergency Stop switch	02 Nos
2	Relay	02 Nos
3	Relay –VIP Module	02 Nos
4	Relay – Trim	02 Nos
5	Switch Kit – Start/ Stop – Engine	02 Sets
6	Key Switch for Engine staring	02 Nos
7	Circuit Breakers for all ratings	02 Nos
8	Fuses of all ratings	02 Nos each
9	Water proof IP 66 Plug & Socket for Search Light and Shore Charging.	02 Sets
10	Navigation lights complete with Lamp of all Colours	02 Sets
11	Fire Detection Sensor	02 Nos
12	Smoke Detection Sensor for console and engine room	02 Nos
13	Batteries (Self Maintenance Free contemporary technology) with insulation mats	02 Nos
14	Starter Motor Assembly	01 No
15	Batteries of contemporary technology (spare)	01 No

LIST OF B&D SPARES - ENGINEERING

Specifications for RHBs

Ser No.	Description a.	Qty b.
1	Complete Engine	01 No
2	Complete stern drive including coupling (not applicable to 4.7m RHB)	01 No
3	Fuel Priming Pump/HP Fuel pump	01 No
4	Alternator (not applicable to 4.7m RHB)	01 No
5	Full set of Injectors	01 Set
6	Sea Water pump (not applicable to 4.7m RHB)	01 No
7	Fresh Water pump (not applicable to 4.7m RHB)	01 No
8	Lub Oil Cooler	01 No
9	Starter complete	01 Set
10	Instrumentation set including relays, sensor, switches, solenoids, gauges, Speedometer, Tachometer, speed transmitter etc (list down part no. of each component)	01 Set
11	Propellers	01 No
12	Fuel Injection Pump	01 No
13	Governor	01 No
14	Charge Air Cooler (not applicable to 4.7m RHB)	01 No
15	Crank Shaft and connecting rod assembly (including big end & small end bearing) - not applicable to 4.7m RHB	01 Set
16	Turbocharger (not applicable to 4.7m RHB)	01 No
17	Pumps repair kit for all pumps (not applicable to 4.7m RHB)	01 Set
18	Turbo charger repair kit (not applicable to 4.7m RHB)	01 Set
19	Injector repair kit (not applicable to 4.7m RHB)	01 Set
20	Electrical parts, Harness as applicable	01 Set
21	S V Mounts as applicable	01 Set
22	Intake/Exhaust VV / Seat	01 Set
23	Complete O-ring set	01 Set
24	Valve Springs	01 Set

LIST OF B&D SPARES - ELECTRICAL

Specifications for RHBs

Ser No.	Description a.	Qty (Nos/ Sets) b.
1	Vessel Sensor Harness W/Extension Harness	01 No
2	Clean Power Harness	01 No
3	Harness between Engine & VIP/ECU	01 No
4	Harness between Main Helm to VIP/ECU	01 No
5	Lanyard Switch	01 No
6	Starter Motor Complete Assembly	01 Set
7	Vessel View Harness	01 No
8	Instrumentation Set	01 Set
9	Sender – Power Trim	01 No
10	Fuel Tank Sender	01 No
11	Relay	01 No
12	Relay – VIP Module	01 Set
13	Switch Kit - Start/Stop _ Engine	01 Set
14	Switch Assembly	01 Set
15	Electrical Control Module	01 Set
16	Harness Actuator	01 No
17	Starter 12 V	01 No
18	Key Switch for Engine Stating	01 No
19	Circuit Breakers of all ratings	01 each
20	Fuses of all ratings	01 each
21	Water proof IP 66 Plug & Socket for Search Light and Shore Charging.	01 Set
22	Switch panel (water proof) for Nav Lights	01 No
23	Alarm Panel for fire detector with Hooter	01 No
24	Fire Detection Sensor	01 No
25	Smoke Detection Sensor	01 No
26	Bus Bar	01 No
27	GPS Power/ Data Cable	01 No
28	GPS	01 No
29	Communication set	01 Set
30	Batteries of contemporary technology suitable for boat engine cranking operations with Insulation Mat	01 No
31	Cable lugs	02 Sets

Appendix 'G'
(Refers to Para 86)

INSPECTIONS, TESTS AND TRIALS

1. Following inspections, trials and tests would be conducted:-

1.1 In Line Inspection

1.2 Technical Tests and Trials

1.3 Pre-Dispatch Inspection

1.4 Joint Receipt Inspection

2. **In Line Inspections**. This inspection shall be carried out by Classification Society in the presence of Naval Overseer nominated by Indian Navy at the builder's premises during construction of the boats and involve scrutiny of the methodology of construction, raw materials and dimensional checks. Dates of such inspections shall be clearly mentioned in the Cardinal Date Programme.

Technical Tests and Trials

3. **Builder's Responsibilities**.

3.1 The builder shall prepare and forward to the class/ Naval Inspecting Authority, a programme of trials before commencement of trials.

3.2 The builder shall arrange for the attendance of representatives of their subcontractors during the trials. However, the Naval Overseers would be positioned and maintained by the Navy.

3.3 The Builder shall lift or slip each boat after completion of all tests to enable examination of underwater hull and fittings.

3.4 The Builder shall be responsible for the provision of any spare parts, tools, equipment, etc. required during trials. Builder shall be responsible for replacement of any item/ equipment damaged or found to be defective during trials without prejudice to any of the spare gear provided. The Builder shall also make good at his own expense, all defects found in the construction, fittings, machinery and electrical installations before the boat is accepted.

3.5 Fuel/ oil/ lubricants for the test/ trials shall be arranged by boat builder.

4. **Sequence of Tests & Trials**. Unless prior Indian Navy approval is obtained, all tests and trials shall be carried out in the same sequence as they are described in the following paragraphs and in a continuous manner. Wherever possible, the Inclining Experiment, shall immediately follow the Weighing Test.

4.1 **Swamp Test**. This test shall be carried out only for the first boat of the particular contract. The boat is to be fitted with sufficient buoyancy material to enable conduct of swamp test. The quantity and arrangement of buoyancy proposed shall be forwarded to Indian Navy/ DNA. The objective of this test is to ensure that the boat will remain afloat, stable, upright at normal trim and with at least 10% reserve of buoyancy after it has been freely flooded. This ensures that there is a positive freeboard all round the boat when it is swamped, thus enabling it to be pumped or bailed out.

4.2 **Drop Test**. This test shall be carried out only for the first boat of the particular contract. The completed boat with compensating ballast for full complement, machinery and fuel shall be drop tested, as per the requirements of SOLAS, by dropping the boat in water from a height of 3 meters. After the drop test the boat shall not suffer from any residual deformation/ defect.

4.3 **Impact Test**. This test shall be carried out only for the first boat of the particular contract. The completed boat with compensating ballast for full complement, machinery and fuel shall be subjected to an impact test as per the requirements of SOLAS. For this test, the boat shall be subjected to a lateral impact against a steel impact the boat shall not suffer from any residual deformation/ defects.

4.4 **Deflection Test**. This test shall be carried out only for the first boat of the particular contract. The completed boat with compensating ballast for full complement, machinery and fuel shall be subjected to a deflection test as per the requirements of SOLAS. For this test, the boat shall be supported at the ends and a load equal to twice the mass of the boat shall be placed at the centre. The boat shall not have any residual deflection on removal of the load.

4.5 **Weighing Test**. All boats of the contract shall be weighed using a **certified weigh bridge** or **digital dynamometer**. The boat shall be complete in all respect except that no crew, fuel or stores shall be onboard. The report shall include list of items/ fittings not on boat at the time of test and shall quote their individual weights. The hoisting weight of the boat shall include the following: -

Hoisting Weight (kg) = Fully fitted boat + crew @ 75 kgs + fuel {as mentioned in respective Principle Particulars)} + other fittings (as per **Appendix 'B'**)

4.6 In case of newly constructed ship, weighing test shall be offered by the Shipyard to the Ship's Staff prior ships commissioning. Weighing report to be forwarded to respective WOT and NHQ/ DNA. In case of any increase in weight as against NCD stipulated weight, Shipyard shall undertake adequate measures in liaison with the Boat Builder to bring down the weight within NCD weight limit.

4.7 **Inclining Experiment**. First boat of the contract shall be taken up for Inclining Experiment. The boat shall be as complete as possible. The boat shall be in the same condition as weighed in the weighing test with all fuel tanks completely empty. Any loose item/ equipment shall be properly secured during the test. Inclining experiment is to be undertaken as per class approved procedure and test report is approved by Class rep.

4.8 **Floatation Test**. All the boats shall be subjected to this test. The boat shall remain afloat after loaded with weights representing equipment and full life saving load of men as per carrying capacity. The free board in this condition shall be measured and incorporated in the report. The boat shall remain afloat for a minimum period of two hours and leakages if any are to be rectified by the Builder.

4.9 **Lowering/ Hoisting Trials**. All the boats shall be subjected to this test. Lowering/ Hoisting trials with full equipment/ stores/ complement of boat shall be carried out using lifting arrangements provided in the boat.

4.10 **Mooring Trials**. All the boats shall be subjected to this test. These trials shall be carried out prior to sea trials with the engine running ahead at idling RPM and boat securely moored. The trials shall be of half an hour duration and it is to ensure that the installed machinery operation is satisfactory. Findings of the trials shall be reported to Indian Navy/ DNA and the sea trials shall be undertaken only on satisfactory completion of mooring trials.

4.11 **Speed Trials**. All the boats shall be subjected to this test. Prior to starting engineering trials, all protection devices fitted on the engine will be offered by the boat builder to the trial agency. For the speed trial, boat shall be complete in all respect and fully fuelled. Should any item or equipment be unavoidably missing, ballast of equivalent weight shall be carried in the position of the item. The speed trials of the boat shall be carried out under the following loading conditions: -

4.11.1 **Light Load Condition**. Three crew (for 6.5m, 7m and 10m RHB), Two crew (for 4.7m RHB), Fuel tank half filled (50% of the

fuel required for designed endurance), all basic equipment i.e., ropes, anchor, paddles, Aldis lamp, signal flags, torches, communication set, boat hooks, etc. Four successive runs (two in each direction) of at least 02 Nm shall be made on the measured course for 50%, 85% and 100% engine RPM. The average speed for specified engine RPM shall be calculated and same be indicated in the trial report.

4.11.2 **Full Load Condition**. Complete pax (as per respective principle particulars) with all basic equipment as mentioned at (4.10.1) above, full fuel tank (100% fuel for the designed endurance). Four successive runs (two in each direction) of at least 02 Nm shall be made on the measured course for 50%, 85% and 100% engine RPM. The average speed for specified engine RPM shall be calculated and same be indicated in the trial report.

4.12 **Endurance/ Sea Trials**. Endurance trials of the first boat will be witnessed jointly by class and *IN* rep. Trials of the subsequent boats of a particular order shall be witnessed only by Class. All the boats of a particular order shall be subjected to this test. The boat shall be complete in all respects (fully loaded condition), fully fuelled and ready for sea along with spare-gear. Should any item equipment be unavoidably missing, ballast of equivalent weight shall be carried in the position of the item.

4.12.1 The draughts forward & aft, the level of fuel oil in the fuel tank shall be recorded prior to the onset of trials.

4.12.2 The trial shall be of 04 hours duration for 4.7 m RHB, 08 hours duration for 6.5 m RHB and 7.0 m RHB at economical speed and not less than 120 nm at 24 Kn for 10 m RHB.

4.12.3 On completion, the levels of fuel and L.O. shall again be accurately measured, the draughts forward and aft shall be recorded and vetted by class.

4.13 **Manoeuvrability Trials**. All the boats shall be subjected to these trials and the parameters recorded should be acceptable under Class norms. As a continuation of the full power sea trials the following trials shall be carried out: -

4.13.1 **Turning Circle Trials**. The trial shall be conducted at maximum speed and cruising speed. The rudder shall be put hard over in turn, to determine the turning circles to port and to starboard. The time required to complete the circles and the diameter of the turns (in boat lengths) shall be recorded.

4.13.2 **Astern Trials**. The trial will be conducted at engine OEM recommended power for 05 minutes.

4.13.3 **Crash Stop**. The manoeuvre of full speed to full astern (crash stop) and vice versa shall be demonstrated twice and the time taken shall be recorded.

4.14 All the above said tests are to be completed before transporting of the boat from boat builder premises. Boat builder is required to offer final inspection (Pre-Dispatch Inspection) of the same to Navy in presence of Classification Society members.

5. **Pre-Dispatch Inspection (PDI)**. Post completion of technical tests and trials and prior to dispatch of the boat, PDI is carried out by the Inspection team nominated by NHQ to ensure that the boat is ready in all respects for induction into the Navy. PDI is carried out for each boat at firm's premises before the boat is dispatched to the consignee. The following inspection/ mustering are carried out by the inspection team during PDI:-

5.1 Inspection of boat vis-à-vis approved as fitted General Arrangement drawings.

5.2 Inspection of all Hull, Engineering, Electrical, navigational and other fitted items as per the approved Equipment Schedule for the boat.

5.3 Mustering of Onboard Spares along with loose items supplied with each boat. Mustering of B&D spares for the order when offered.

5.4 Mustering of all documents and drawings as per Equipment Schedule.

6. **Joint Receipt Inspection (JRI)**. Post transportation of the boat to designated naval premises, boat builder would require to offer the boat for Joint Receipt Inspection (JRI). This inspection would include undertaking trials of the boat at naval premises by user department and scrutiny of documents/ drawings/ certificates and spares etc.

7. **Inspection and Trial Reports**. On satisfactory completion of the trials, the Builder shall forward one hard bound copy of detailed reports of each trial to Indian Navy for every boat separately. The report would include all settings of cut-outs and all engine parameters observed during the trials. The reports shall also include proposals (if any) to improve the performance of the boat even if these are minor in nature. The boat builder shall carryout all such modifications. Authority for re-ordering trials rests with Indian Navy if satisfactory results are not achieved and the Builder shall comply with such directives as and when issued.

ENCLOSURE 1
SPECIFICATIONS APPLICABLE TO 4.7 M RHB

1. **Principal Particulars**

Ser No	Particulars a.	Specified Value/Range b.
1	Length extreme including appendages & collar	4.7 M ± 0.05 M
2	Beam extreme including collar	2.1 ± 0.03 M
3	Maximum Draught Including Appendages	0.35 M for hull and 0.45 M at OBM
4	Full Load Condition	< 1500 kg
5	Fuel Oil Capacity	To meet specified endurance with 25% reserve
6	Weight (Hoisting)	Not more than 1000 kg (fully fitted boat, 95% of fuel oil capacity, accessories and 02 crew)
7	Speed (Full Load)	Not less than 25 knots at full load condition
8	Economical Speed	10-12 knots (under full load condition upto sea state 3)
9	Endurance (Full Load)	Not less than 04 Hr at economical speed at full load condition.
10	Reserve of buoyancy	Unsinkable even when filled with water with min 10% reserve of buoyancy
11	Operating Sea State	Operating – 3 ; Survival – 5
12	Crew	02 persons
13	Carrying Capacity	08 men (including crew)
14	Engine	Outboard Motor either from M/s Yamaha or M/s Mariner or M/s Mercury or M/s Tohatsu or any suitable type tested OBM for achieving the desired parameters with product support available in India
15	Class Notation	Swastik-SU-HSLC-RS2-RESCUE BOAT or equivalent

MACHINERY REQUIREMENT

2. The builder shall be responsible for installation and commissioning of the main propulsion unit in accordance engine OEM recommendations and Classification Society (IRS/ABS/LR/BV/NKK/DNV-GL/RINA) rules.

3. **Engine**. The boat shall be powered by a standard outboard motor of "M/s Yamaha" OR "M/s Mariner" OR "M/s Mercruiser" make. The OBM shall be provided with fresh water flushing arrangement. Mandatory aspects for starting/ stopping of engine are elaborated in succeeding paragraphs.

4. **Starting**.

4.1. Both remote and local manual starting arrangements should be provided.

4.2. Where there is only electric start, there must be a dual-redundancy starting system with cross connection. An electric starting system could provide cross-connection to an appropriately specified secondary battery. This battery need not be dedicated, but must remain charged at all times.

4.3. An over-ride capability must be present, if the Engine stop cord/ switch is accidentally operated, resulting in engine shut down at a critical moment, such as in big surf.

5. **Stopping**.

5.1. **Deadman Switch**. Instrumentation of OBM should include an "Emergency Stop/ Deadman switch".

5.2. **Fuel Supply Shut-off Valve**. An Emergency Fuel Supply shut–off valve to be provided outside of casing, to prevent spreading of fire.

6. **Fuel System**.

6.1. The engine shall draw fuel from fixed fuel tank of sufficient capacity to meet the fuel oil capacity requirements specified in this NCD. Further, provision should be provided for easy removal of fuel tank for periodic pressure testing by means of a watertight hatch.

6.2. The fuel tank shall be constructed of stainless steel (AISI 316). Size of fuel tank shall be in accordance to fuel oil capacity specified and to be centrally mounted under the deck with a straight filler pipe with cap, vent pipe and filter. The fuel tank cover shall be on a raised WT coaming. The Cover plate for periodic cleaning the tank shall be provided. A calibrated

dipstick shall be provided and stowed on top outside of the engine casing. The fuel tank shall be pressure tested iaw Class requirement and certificate shall be rendered. The fuel lines should be connected by means of adaptors.

6.3. Fuel system to be provided with water separator filter (10-30μ) suited to the OBM fuel flow capacity requirement as recommended by engine OEM.

6.4. The boat builder in consultation with engine OEM shall install requisite filters and pumps in the fuel line to ensure supply of uncontaminated fuel to engine from fuel tank.

7. **Instrument Panel**. Standard instrument panel/ instrumentations of OBM as recommended/ offered by OEM of the OBM shall be mounted in front of the helmsman. Cable wiring shall be loomed inside the console and fed through '**under deck cable ducting'** to the engine.

8. **Steering System**. The steering shall be from the helmsman position actuated by rim type wheel mounted at 45^0 to the vertical and transmitted by an electro-hydraulic system to OBM Unit at the transom. Additionally, arrangement for direct tiller control should also be provided.

9. **Bilge System**. RHB shall be capable of completely clearing the green water/hull cavity/ bilges through pumps/self - draining scuppers on transom (fitted with self-opening/ closing flap). A semi-rotary hand pump of 1000 litres per hour capacity as per class shall be provided in the aft end. The pump shall be of standard make (ISI) capable of taking suction from the bilge sump aft. Bilge alarm indication to be provided at coxswain console.

10. **Dry Running Kit**. A dry-run kit shall be provided by the boat builder in consultation with engine OEM to facilitate running of engine on chocks.

ELECTRICAL REQUIREMENTS

11. List of standard electrical equipment/ fittings are as tabulated below: -

Ser No.	Item Description	Qty
1	Starter 12 V	01 no
2	Regulator for alternator	01 no
3	Navigation lights (complete set)	08 nos
4	Switches for Navigation light	04 nos
5	Search light lamp	02 nos
6	Push button switch for horn	01 no
7	Start push button for Starting engine	01 no
8	Key switch for engine starting (Off / Ignition)	01 no
9	Brush for starter	01 set

Ser No.	Item Description	Qty
10	Brush holder with springs	01 set
11	Brush for Alternator	01 set
12	Fuse links	05 nos
13	Fuse base fitting with Fuse carrier	02 nos
14	Bearing / bushes for alternator (DE & NDE)	01 each
15	Bearing / bushes for starter (DE & NDE)	01 each
16	Armature of starter	01 no
17	Battery lugs	04 nos
18	Cable battery to starter with lugs (Both colour)	01 Meter (Both colour)
19	Insulation Mat for battery stowage	01 no

DRAWINGS AND DOCUMENTS

12. **Operation Manuals of OBM**. The operation manuals shall consist of the following: -

12.1. Introduction

12.2. Operating information

12.2.1 Normal operation and limiting values

12.2.2 Operation under special conditions

12.2.3 Break down and emergency repairs

12.2.4 Fault finding

12.2.5 Performance & test data

12.3. Technical Description

12.3.1 Construction detail

12.3.2 Setting to work

12.3.3 List of non-repairable items

13. **Maintenance and Workshop manuals of OBM**. This must include following: -

13.1. Preventive and corrective maintenance

13.2. Procedure/Guidelines to carry out maintenance which is to include Top Overhaul/ Major Overhaul

13.3. Performance and other fault location

13.4. Weight and dimension for lifting purpose

13.5. Maintenance tree

13.6. Special tools

13.7. Reclamation procedure for worn-out or damaged parts

13.8. Alignment procedure

13.9. Any special instruction

14. Parts catalogue for OBM. Both hard and soft copy of parts catalogue be provided in ILMS format

ENCLOSURE 2
SPECIFICATIONS APPLICABLE TO 6.5 M RHB

1. **Principal Particulars**

Ser	Particular	Specified Value/Range
1	Length extreme including appendages & collar	6.5 M
2	Beam extreme including collar	2.5 M + 0.05 M
3	Draught (Full Load)	≤ 0.60 M
4	Weight (Hoisting)	Not more than 2400 kg (fully fitted boat, 95% of fuel oil capacity, accessories and 03 crew)
5	Full Load Condition	≤ 3000 kg
6	Speed (Full Load)	30 knots at full load condition
7	Economical Speed	10-12 knots (under full load condition)
8	Endurance (Full Load)	Not less than 08 hrs at economical speed at full load condition.
9	Fuel Oil Capacity	To meet specified endurance with 10% reserve
10	Reserve of buoyancy	Unsinkable even when filled with water with min 10% reserve of buoyancy
11	Operating Sea State	Operating – 3 ; Survival – 5
12	Crew	03 persons
13	Carrying Capacity	10 men (including crew). Able to transfer 14 men in emergency condition
14	Engine	One Caterpillar **OR** Cummins **OR** Mercury **OR** MAN **OR** Volvo Penta make engine **OR** Any suitable engine with Stern Drive for achieving the desired parameters with product support available in India
15	Class Notation	Swastik-SUL-HSLC-RS0-Patrol or equivalent

ENCLOSURE 3
SPECIFICATIONS APPLICABLE TO 7 M RHB

1. **Principal Particulars**

Ser No	Particular	Specified Value/Range
1	Length extreme including appendages & collar	7.0 M ± 0.3 M
2	Beam extreme including collar	$\leq$ 2.8
3	Draught (Full Load)	$\leq$ 0.60 M
4	Weight (Hoisting)	Not more than 2700 kg (fully fitted boat, 95% of fuel oil capacity, accessories and 03 crew)
5	Full Load Condition	$\leq$ 3600 kg
6	Speed (Full Load)	32 knots at full load condition
7	Economical Speed	10-12 knots (under full load condition)
8	Endurance (Full Load)	Not less than 08 hrs at economical speed at full load condition.
9	Fuel Oil Capacity	To meet specified endurance with 10% reserve
10	Reserve of buoyancy	Unsinkable even when filled with water with min 10% reserve of buoyancy
11	Operating Sea State	Operating – 3 ; Survival – 5
12	Crew	03 persons
13	Carrying Capacity	14 men (including crew). Able to transfer 18 men in emergency condition
14	Engine	One Caterpillar **OR** Cummins **OR** Mercury **OR** MAN **OR** Volvo Penta make engine **OR** Any suitable engine with Stern Drive for achieving the desired parameters with product support available in India
15	Class Notation	Swastik-SUL-HSLC-RS0-Patrol or equivalent

ENCLOSURE 4
SPECIFICATIONS APPLICABLE TO 10 M RHB

GENERAL DESCRIPTION

1. The boat shall be built as per proven hull design and in accordance with Classification Society rules and norms, and be suitable compliant in respect of afloat safety in accordance with the MCA requirements for Fast Rescue Boats under SOLAS regulations and in compliance with Indian Navy specifications. Latest design concept with respect to ergonomics/ functional aspects and crew comfort are to be adopted. Details of such proposal and authenticity of the design shall be provided along with the technical bid. Acceptance of such proposal is completely up to the discretion of Indian Navy.

2. **Principal Particulars**: -

Ser No	Particulars	Specified Value/Range
1	Length extreme including appendages & collar	10 m ± 0.5 m
2	Beam extreme including collar	Not More Than 3.5 m ± 0.2 m
3	Draught (Full load)	Not More Than 0.8 m
4	Hoisting Weight	Less than 8000 kg, fully fitted boat, 05 personnel including crew, 95% fuel, water and sea going accessories.
5	Full Load Condition	Less than 9500 kg (including cupola)
6	Speed (Full load)	More than 30 Kn
7	Economical Speed	24 Kn (under full load condition up to Sea State 4)
8	Endurance (Full load)	Not less than 120 NM at 24 Kn, extendable by carrying additional fuel tank
9	Fuel Oil Capacity	To meet specified endurance with 25% reserve
10	Reserve of buoyancy	Unsinkable even when filled with water with min 10% reserve of buoyancy
11	Operating Sea State	Sea State 4 with full load and speed of at least 24 Kn
12	Crew	03
13	Carrying Capacity (including Crew)	18
14	Sea Worthiness	Capable to operate upto Sea State 4 (with full load & speed of atleast 24 Kn) and Steerable up to Sea State 5

Ser No	Particulars	Specified Value/Range
15	Engine	Suitable inboard engine with Stern Drive for achieving the desired speed and range requirements, and other parameters with product support in India.
16	Ballistic Protection (NIJ Level III)	Bullet proof cupola arrangement for control console and covered canopy
17	Class Notation	Swastik-SUL-HSLC-RS0-Patrol or equivalent

3. The boat will be in Naval Service for at least 12-15 years. The propulsion package should be capable of providing sustained operations for 08-10 hours per day, with annual exploitation rate of more than 1000 hours. The expected operating profile shall be as follows:-

Ser No	Speed of RHB in Kn	Hrs	Operating Time
1	30 Kn or above	150	15% of Annual exploitation
2	Excess of 12 Kn- up to 30 Kn	650	65% of Annual exploitation
3	Excess of 5 Kn- up to 12 Kn	200	20% of Annual exploitation

DESIGN

4. **Towing Arrangement**. The towing arrangement at fore and aft shall be provided. The structural strength requirements is to be approved by Class. The arrangement to be load tested and a certificate in this regard to be rendered. The following towing arrangement shall be provided:-

4.1. Towing another boat of equal size and displacement with speed of at least 08 kn. Suitable arrangements shall be provided at stern for towing of another boat.

4.2. Receiving towing assistance from another vessel. Suitable arrangements shall be provided at the bow to facilitate receiving of tow from another vessel.

5. **Self-Righting Arrangement**. The boat shall be self-righting type. Suitable light weight self-righting system (inflatable type) shall be provided.

6. **Ballistic Protection**. Ballistic protection of NIJ level III shall be provided for critically exposed areas like control console. Additionally, front and sideways ballistic protection shall be provided for main control console operator. Suitable materials viz. Kevlar, ALON, ceramic certified for NIJ Level III ballistic protection are to be used.

EQUIPMENT & FITTINGS

7. **Fresh Water**. A portable high grade synthetic fresh water tank with stowage arrangement (Make: Vetus/ equivalent) shall be provided for carrying 40 ltrs of potable drinking water. The tank should have inbuilt automatic pumping arrangement and connection for ready use. The arrangement should have window of adequate size to carryout periodic cleaning.

8. **Boat Trailer**. A lightweight aluminium alloy transportation trailer suitable for towing using MT vehicle shall be provided. The trailer should have brake system. A guidance picture of the RHB and trailer is placed at **Annexure I**.

9. **Portable Fuel Tanks**. Four portable fuel tanks of 20 Ltrs capacity each (Make: Vetus/ equivalent) with stowage arrangement shall be provided to enhance the endurance of the RHB. Suitable piping/ end-connections shall be provided to facilitate running of engine from the portable tank.

ELECTRICAL REQUIREMENTS

10. **Power Supply**. The power generation and distribution (PGD) system shall cater for uninterrupted power supply to various consumers i.e control system, Navigation and Communication aids and lighting/electrical appliances fitted in RHB.

11. **Lightning Conductor**. Lightning conductor shall be provided.

NAVIGATION AND COMMUNICATION

12. **Command Console**. An ergonomically designed **covered canopy type** coxswain console and helm post (centreline mounted) for the crew, having ballistic protection (NIJ level III), window wipers, should be provided to enable discharge of all Command and Control functions. The RHB should be equipped with an electronic monitoring system, wherein the following system status is available to the crew:-

12.1. All vital information like speed, heading, navigation waypoints, course to steer, track point etc.

12.2. Remote control facility for operations of engines and auxiliary machinery.

12.3. All engine controls, navigation and common instruments shall be mounted on the console. Battery stowage and electrical distribution panels shall be housed under the console, access being by side WT hatch.

12.4. The construction and fitment of console should comply with latest and relevant **IP/ IEC** standards as specified in the Class rules

(self-righting boat). All electrical installations, instrumentations and batteries may be housed inside the console as per marine standards. The coxswain shall operate the boat from a seated position. The field of vision from the main helm position shall conform to the requirements of **ISO 11591**.

12.5. The instrument panel and compass should be provided with illumination, controlled by a toggle switch on instrument panel.

12.6. A navigational compass of reputed make shall be fitted on top of the console in a suitable position for the coxswain use.

12.7. The instrument panel should be protected with acrylic (waterproof) cover.

12.8. All electrical fittings shall be fully marinised and water tight including Navigation equipment.

13. **Multi-Functional Display (MFD) for Navigation**. Multi-Functional Display (MFD) of suitable size for mounting on coxswain console and capable of functioning on battery shall be provided. MFD should be compatible to upload and display Electronic Navigational Charts (S63 format) and integrate with GPS receiver and AIS for navigational display.

14. **Additional Equipment**. The following equipment for communication and safety of the boat shall be provided:-

14.1. SBAS enabled GPS

14.2. AIS

14.3. Illuminated Boat Compass

14.4. Weather Proof VHF MMB with DSC feature for distress calling, battery backup and noise cancelling hands free headphone and speaker arrangement for coxswain.

14.5. *IN* approved Hand held VHF Radio with battery charger, spare batteries, noise cancelling hands free headphone and water proof bag.

14.6. INSB as per NHQ/DSR Policy WP/0206 dated 05 Feb 14.

ANNEXURE I TO ENCLOSURE 4
(Para 8 refers)

GUIDANCE PICTURE OF TRAILER ARRANGEMENT

